IRONSTRIKE
HEAT FOR LIFE™

INSTALLATION AND OPERATION MANUAL

COUNTRY® COLLECTION

EPA Certified Wood-Burning Fireplace Inserts

Save These Instructions For Future Reference

P/N 900103-00, REV. NC 12/2013

Legacy™ C260

P900103-00

Wood Fireplace Inserts Legacy™ Model C260

A French manual is available upon request. Order P/N 900104-00.

Ce manuel d'installation est disponible en francais, simplement en faire la demande. Numéro de la pièce 900104-00.

This appliance must be properly installed and operated in order to prevent the possibility of a house fire. Please read this entire installation and operation manual before installing and using your wood fireplace insert. Failure to follow these instructions could result in property damage, bodily injury or even death. Contact your local building or fire officials to obtain a permit and information on any installation requirements and inspection requirements in your area.

NATIONAL FIREPLACE INSTITUTE NFI CERTIFIED
www.nficertified.org
We recommend that our woodburning hearth products be installed and serviced by professionals who are certified in the U.S. by the National Fireplace Institute® (NFI) as NFI Woodburning Specialists or who are certified in Canada by Wood Energy Technical Training (WETT).
Wood Energy Technical Training www.wettinc.ca

Tested & Listed By O-T-L Portland Oregon USA C US
OMNI-Test Laboratories, Inc.
Report #050-S-02b-2

⚠ WARNING

- **Hot! Do not touch! The glass and surfaces of this appliance will be hot during operation and will retain heat for a while after shutting off the appliance. Severe burns may result.**
- **Carefully supervise children in the same room as appliance.**

CONGRATULATIONS!

When you purchased your new wood-burning fireplace insert, you joined the ranks of thousands of individuals whose answer to their home heating needs reflects their concern for aesthetics, efficiency and our environment. We extend our continued support to help you achieve the maximum benefit and enjoyment available from your new wood-burning fireplace insert.

Thank you for selecting an Innovative Hearth Products, LLC (IHP) wood-burning fireplace insert as the answer to your home heating needs.

TABLE OF CONTENTS

Using This Manual 2
Important Safety Information 3
Testing Information 4
Draft Requirements 4
Selecting the Proper Venting System 4
Negative Pressure Warning 5
Creosote 5
Ash Disposal 5
Fuel 5
Paint Curing 5
Burn-In Period 5
Brick Installation 6
Required Clearances 7
Hearth Protection 8
Chimney Requirements 9
Installation Procedures - Masonry Chimney 9
Positive Flue Connection 10
Fireplace Pre-Installation Preparation 11
Insert Pre-Installation Preparation 11
Chimney Liner Installation 11
Installing the Insert 11
Post Installation Checks 11
Fireplace Warning Tag 11
Operating Hints 12
Starting and Maintaining a Fire 12
Blower Operation (optional kit) 13
Operating Techniques and Hints 14
Getting the Most Out of Your Fireplace insert 14
Maximizing Your Fireplace Insert's Overall Efficiency 14
Achieving Clean, Long Burns 14
Maintenance 15
Clean Glass 15
Troubleshooting 16
Do's and Don't 17
Replacement Parts Lists 18-20
Accessories 21
Safety / Listing Labels 22
Warranty 23
Product Reference Information 24

USING THIS MANUAL

Please read and carefully follow all of the instructions found in this manual. Please pay special attention to the safety instructions provided in this manual.

PRODUCT IS SUBJECT TO CHANGE WITHOUT NOTICE

IMPORTANT SAFETY AND WARNING INFORMATION

READ THIS MANUAL IN ITS ENTIRETY AND UNDERSTAND THESE RULES TO FOLLOW FOR SAFETY.

1. When this room heater is not properly installed, a house fire may result. To reduce the risk of fire, follow the installation instructions. Contact local building or fire officials about restrictions and installation inspection requirements in your area.
2. Wear gloves during installation to avoid injury from sharp edges on the insert and/or its parts.
3. This unit is designed and engineered to burn only dry, well-seasoned wood. Burning wet wood will greatly reduce your inserts efficiency, produce excessive amounts of smoke and can cause dangerous chimney fires due to creosote build-up.
4. Before opening the door, **the draft control must be fully open to avoid possible combustion flash** (ignition of hot volatile gases as the door is opened).
5. Never use gasoline, gasoline-type lantern fuel, kerosene, charcoal lighter fluid, or similar liquids to start or 'freshenup' a fire in this heater. Keep all such liquids well away from the heater while it is in use. **DO NOT USE CHEMICALS OR FLUIDS TO START THE FIRE.**
6. While burning, fuel utilizes oxygen from the air in the room. Be sure to allow an adequate amount of fresh air into the room where the insert is burning.
7. The outside surface of the insert will be hot while burning properly and can set items like clothing and curtains on fire. Keep furnishings and other combustible materials away from the insert. Using the heat from the insert to dry wet clothing can be hazardous if clothes are placed too near the surface of the insert.
8. **HOT WHILE IN OPERATION. KEEP CHILDREN, CLOTHING FURNISHINGS AND COMBUSTIBLE MATERIAL A CONSIDERABLE DISTANCE AWAY. CONTACT MAY CAUSE SKIN BURNS.** Do not allow children to play near the insert without close supervision. Do not touch the insert while it is burning. Use extreme caution while the unit is in use. Surface temperatures become dangerously hot and can cause serious burns.
9. Do not allow anyone to operate the insert who is not familiar with the operating instructions.
10. Attempts to achieve heat output rates that exceed insert design specifications can result in permanent damage to the insert. Never leave your insert unattended on high burn rates. This may cause overfiring. Overfiring the insert may cause a house fire. **If the insert glows, you are overfiring.**
11. Keep a water hose or hand-operated fire extinguisher close for safety.
12. **Smoke Detectors** - Since there are always several potential sources of fire in any home, we recommend installing smoke detectors. If possible, install the smoke detector in a hallway adjacent to the room (to reduce the possibility of occasional false activation from the heat produced by the insert). If your local code requires a smoke detector be installed within the same room, you must follow the requirements of your local code. Check with your local building department for requirements in your area.
13. Inspect your chimney at least once a month during the burning season to check for soot and creosote accumulations. Any accumulations over 1/8" thick should be removed by a professional chimney sweep. Do not attempt to burn out heavy creosote accumulations with a hot fire. If large accumulations are occurring, review your burning procedures.
14. If a creosote fire should develop, the fire department should be called immediately and then attempts should be made to control the fire until assistance arrives. If a "runaway" fire should develop causing over-heating of the insert, the door and draft regulators should be closed immediately. The fire should die down once deprived of oxygen. After a severe chimney fire, the complete chimney system should be checked before further use.
15. Do Not Use Grate Or Elevate Fire - Build Wood Fire Directly On Hearth (firebrick). Do not use andirons or other methods of supporting the fuel.
16. Please read this entire manual before you install and use your new room heater. Failure to follow instructions may result in property damage, bodily injury, or even death.
17. Check all local building and safety codes before installation. The installation instructions and appropriate code requirements must be followed exactly and without compromise. In the absence of local codes the following standards and codes must be followed.
18. In the U.S.A, install in accordance with the National Fire Protection Association's Code, NFPA 211, Standards for Chimneys, Fireplaces, Vents and Solid-Fuel-Burning Appliances, or similar regulations, may apply to the installation of a Solid-Fuel-Burning appliance in your area. In Canada, the guideline is established by the CSA Standard, CAN/CSA-B365-M93, Installation Code for Solid-Fuel-Burning Appliances and Equipment.
19. **DO NOT CONNECT TO OR USE IN CONJUNCTION WITH ANY AIR DISTRIBUTION DUCTWORK UNLESS SPECIFICALLY APPROVED FOR SUCH INSTALLATIONS.**
20. **WARNING: BURNING IMPROPER FUEL (I.E. CHARCOAL) CAN RESULT IN CARBON MONOXIDE POISONING, WHICH MAY LEAD TO DEATH!**
21. **Carbon Monoxide Poisoning** – early signs of carbon monoxide poisoning resemble the flu with headaches, dizziness, or nausea. If you have these signs, get fresh air at once! Have the heater inspected by a qualified service technician. Some people are more affected by carbon monoxide than others. These include pregnant women, people with heart or lung disease or anemia, those under the influence of alcohol, and those at high altitudes.
22. Failure to use manufacturer provided parts, variations in techniques and construction materials or practices other than those described in this manual may create a fire hazard and void the limited warranty.
23. Do not make any make-shift compromises during installation. Any modification or alteration may result in damage to the appliance or dwelling and will void the warranty, certification and listings of this unit.
24. These appliances are designed as supplemental heaters. Therefore, it is advisable to have an alternate heat source when installed in a dwelling.
25. **Do Not Overfire – If Heater or Chimney Connector Glows, You Are Overfiring.**
26. **DO NOT CONNECT THIS UNIT TO A CHIMNEY FLUE SERVING ANOTHER APPLIANCE.**
27. **DO NOT BURN GARBAGE OR FLAMMABLE FLUIDS SUCH AS GASOLINE, NAPHTHA OR ENGINE OIL.**

TESTING INFORMATION

This manual describes the installation and operation of these non-catalytic wood heaters. These heaters meet the U.S. Environmental Protection Agency's emissions limits for wood heaters sold on or after July 1, 1990. This heater has been developed, tested and constructed in accordance with the requirements of UL 1482, ULC S628 and HUD standards and is listed by OMNI Test Laboratories, Portland, OR. It has been approved for residential and alcove installations.

DRAFT REQUIREMENTS

Your wood fireplace insert is dependent upon a properly functioning chimney for optimum performance. It is a high efficiency appliance that loses much less heat up the chimney than older appliances and fireplaces. For this reason it is important to match the fireplace insert to the chimney. The chimney has two functions:

1. It draws combustion air into the appliance (without air, no fuel will burn) and
2. It exhausts combustion by-products. Your new appliance is what is known as a "natural draft" appliance.

The appliance depends solely on the natural draft of the chimney system to draw combustion air into the unit. Draft is the force that moves air from the appliance up into the chimney. The amount of draft in your chimney depends on the length of the chimney, local geography, nearby obstructions and other factors. Too much draft may cause excessive temperatures in the appliance (overfiring). Slow or inadequate draft equals poor combustion and possible smoking problems. The following are some conditions that may contribute to poor chimney draft:

1. A chimney too large for your appliance.
2. A chimney with not enough height to produce adequate draft.
3. A chimney with excessive height (this may allow exhaust to cool too much before exiting, which will stall the rate the exhaust exits).
4. Offsets in the venting system are too restrictive (see *Chimney Guidelines)*.

Inadequate draft will cause the appliance to leak smoke into the room through the fireplace insert and the chimney connector joints.

Excessive draft may cause an uncontrollable burn or a glowing red fireplace insert or chimney part.

Overfiring Damage - If the heater or chimney connector glows, you are overfiring. Other symptoms may include: Cracking, warping or burning out of components, plated accessories may turn color, stove glass may develop a haze, which will not come off with cleaning.

Overfiring of a stove or fireplace insert is a condition where excessive temperatures are reached, beyond the design capabilities of the appliance. The damage that occurs from overfiring is not covered under the manufacturer's limited warranty.

Also see *Troubleshooting* on ***Page 16***.

SELECTING THE PROPER VENTING SYSTEM

The appliance is merely one component of a larger system. The other equally important component is the venting system. This is necessary for achieving the required flow of combustion air to the fire chamber and for safely removing unwanted combustion by-products from the appliance. If the venting system's design does not promote these ends, the system may not function properly. Poorly functioning venting systems may create performance problems as well as be a safety hazard. **A draft test should read greater than .04' W.C. (inches water column) and less than .08" W.C**. As per NFPA-211 standard (see paragraph below), the installer must take into account all variables within the installation and install the appliance in such a manner that satisfies the draft requirements of the appliance. See *Chimney Guidelines* below to assist you in selecting the proper venting system for your installation.

American National Standards Institute ANSI/NFPA 211, Standard for Chimneys, Fireplaces, Vents, and Solid Fuel-Burning Appliances - See Draft Section: A chimney or vent shall be so designed and constructed to develop a flow sufficient to completely remove all flue and vent gases to the outside atmosphere. The venting system shall satisfy the draft requirements of the connected appliance in accordance with the manufacturer's instructions.

Chimney Guidelines:

- This appliance requires approximately 12 feet minimum of "effective draw" provided by the venting system. As a rule of thumb, every 90 degree total direction change in the venting will result in a loss of approximately 5 feet of "effective draw." Example: If two 45 degree offsets are used, subtract 5 feet from the actual vertical vent height to determine your "effective draw." In this case if you had 14 feet of vertical vent, the effective draw would only be approximately 9 feet (14 ft. - 5 ft. = 9 ft.), therefore it may be necessary to add additional height to the venting system.
- If the venting system is all vertical and the total vent length above the flue outlet exceeds 14 feet, it is recommended that the 8" to 6" pipe reducer is used (cat. no. 71134) and a 6" venting system be installed. At higher elevations, this may not be necessary.
- In well insulated and weather tight homes, it may be difficult to establish a good draft up your chimney. The poor draft is caused by a shortage of air in the house *(see Negative Pressure Warning on* ***Page 5****)*.

Chimney Height Requirements

The chimney must extend 3' (.92m) above the level of roof penetration and a minimum of 2' (.61m) higher than any roof surface within 10' (3m) (see below). Check with your local building officials for additional requirements for your area.

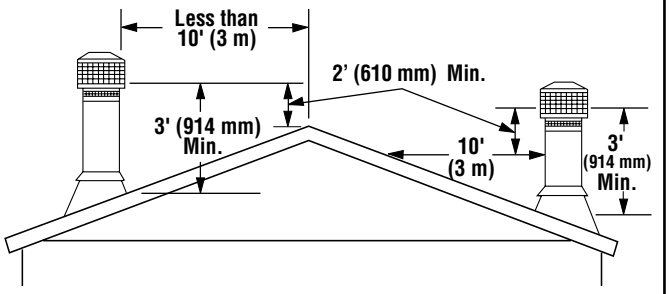

***Figure 1** - Chimney Height Requirements*

To pass inspection in nearly any jurisdiction, the chimney must meet both safety and exhaust flow requirements. The (3' by) 2' by 10' rule applies to both masonry and factory-built chimneys.

**** Ref. USA - National Standard, NFPA 211-latest edition and Canada National Standard CSA B365-01-latest edition. Vents installed with a listed cap shall terminate in accordance with the terms of the cap's listings.***

NOTE: DIAGRAMS & ILLUSTRATIONS ARE NOT TO SCALE.

NEGATIVE PRESSURE WARNING

This appliance is not designed to be operated in a negative pressure. In very airtight homes with large kitchen exhaust fans, furnace cold air returns, fresh air exchange systems and any other air system in close proximity to the heating appliance may create a negative pressure in the same room as the heating appliance. This can create dangerous back drafting of the fireplace insert and chimney joints, drawing combustion by-products into the home. Be sure your home has adequate makeup air to eliminate negative pressures caused by the above-mentioned sources. IHP accepts no liability for damages resulting from negative pressures described above.

Ventilation Requirements - Provide adequate air for combustion. The fresh air requirements of this appliance must be met within the space where it will be installed. Ventilation is essential when using a Solid-Fuel-Burning heater. In well insulated and weather tight homes, it may be difficult to establish a good draft up the chimney (caused by a shortage of air in the home). The lack of air is caused by many common household appliances which exhaust air from the home (such as a furnace, heat pump, air conditioner, clothes dryer, exhaust fans, fireplaces, and other fuel burning appliances). Also, the combustion process of this heater uses oxygen from inside the dwelling. If the available fresh air delivery in the dwelling is insufficient to support the demands of these appliances, problems can result (i.e. excessive negative pressure can develop in the dwelling which will affect the rate at which this appliance can draft thus resulting in performance problems. To correct this problem it may help to open a window (preferably on the windward side of the house).

CREOSOTE, FORMATION AND NEED FOR REMOVAL

When wood is burned slowly, it produces tar and other organic vapors, which combine with expelled moisture to form creosote. The creosote vapors condense in the relatively cool chimney flue of a slow-burning fire. As a result, creosote residue accumulates on the flue lining. When ignited, this creosote makes an extremely hot fire. The chimney and chimney connector should be inspected at least once monthly during the heating season to determine if a creosote buildup has occurred. If creosote has accumulated (1/8" [3mm] or more), it should be removed to reduce the risk of a chimney fire.

Establish a routine for the fuel, wood burner and firing technique. Check daily for creosote build-up until experience shows how often you need to clean to be safe. Be aware that the hotter the fire the less creosote is deposited, and weekly cleaning may be necessary in mild weather even though monthly cleaning may be enough in the coldest months. Contact your local municipal or provincial fire authority for information on how to handle a chimney fire. Have a clearly understood plan to handle a chimney fire.

DISPOSAL OF ASHES

Ashes should be scooped out of a cool stove or fireplace insert with a small metal shovel. Ashes should be placed in a steel container with a tight fitting lid and moved outdoors immediately. The closed container of ashes should be placed on a non-combustible floor or on the ground, well away from all combustible materials, pending final disposal. If the ashes are disposed of by burial in soil or otherwise locally dispersed, they should be retained in the closed container until all the cinders have thoroughly cooled. Ashes can ignite up to 72 hours after removal from the fireplace insert.

FUEL

This appliance is designed and engineered to burn, dry, well-seasoned wood only.

Dry, seasoned wood is that which has been cut, split and allowed to dry under a covered area where air is free to flow and circulate under and around the wood (not under a tarp or plastic). Make sure wood is not stacked directly on the ground, it may absorb moisture from the ground. It should be allowed to dry in these conditions for a minimum of six months, preferably one year or more. **IT MUST BE UNDERSTOOD THAT WOOD CANNOT BE LEFT IN ANY KIND OF WET OR DAMP AREA OR IT WILL NEVER BECOME COMPLETELY SEASONED**. Your fireplace insert will not operate at the level that it is meant to unless you use seasoned, dry wood. Do not burn driftwood or wood that has been in salt water, doing so will void your warranty. Do not burn treated wood, coal, garbage, cardboard, solvents, or colored paper. Burning treated wood, garbage, solvents, or colored paper may result in the release of toxic fumes. This type of burning will also void your warranty.

Do Not store fuel within space heater installation clearances or within the space required for refueling and ash removal.

PAINT CURING

If your appliance has plated accessories, be sure to clean it with a household type glass cleaner and a very soft cloth to remove any fingerprints and residues prior to the first fire and before any fire if the plated accessory has been handled or soiled. Do not close the door tightly during the "Burn-In Period." Also, open the door frequently (every 5-10 minutes) to keep the gasket from adhering to the curing paint. Ventilate the house well during these first firings as the paint gives off carbon dioxide and unpleasant odors. It is recommended that persons sensitive to an imbalance in the indoor air quality avoid the stove or fireplace insert during the curing process.

Your new appliance is painted with a high temperature paint that cures during the first few firings. We recommend that you put your stove or fireplace insert through a regimen of three burns. The first two should last for 20 minutes each at 250 degrees (the stove or fireplace insert should be allowed to cool completely between each burn). The third should be a burn of at least 450 degrees F. for 45-60 minutes. The paint will become soft, gummy and emit non-toxic smoke during these burns. After the stove or fireplace insert cools down for the third time, the paint will harden. **DO NOT BUILD A LARGE ROARING FIRE UNTIL THIS CURING EFFECT IS COMPLETE OR YOU MAY DAMAGE THE FINISH OF YOUR INSERT**. Spray can touch-ups should be done only with a high temperature stove paint (cat. no. H8159), available from all IHP dealers.

BURN-IN PERIOD

Please be patient with the heat output of your stove or fireplace insert for the first few weeks. The steel will go through a curing process that eliminates moisture, which is deep in the steel and firebrick. This moisture will reduce initial heat output of your stove or fireplace insert and may make it difficult to start. **(DO NOT OVERFIRE THE INSERT DURING THIS PROCESS. IF THE INSERT OR CHIMNEY BECOMES RED, REDUCE THE AMOUNT OF AIR ENTERING THE INSERT IMMEDIATELY).**

BRICK INSTALLATION

Brick Installation

CAUTION: Wear gloves during brick installation in case of sharp edges inside the fireplace insert.

NOTE: *Installation of the baffle boards and baffle blanket is easier when you can still access the flue outlet, (before connecting the flue vent). Be* s***ure the baffle blanket is placed flat on the baffle boards so as not to block exhaust flow to the flue. Use a ruler or a piece of kindling to reach over the baffle blanket*** *to be sure it is completely flat on top of the baffle boards.*

1. Install bricks #1-28 in the numbered sequence shown in ***Figure 2***.
2. Next, you will install the rear baffle boards which are the smaller two of the four baffle boards. The boards will be installed with the 5-1/2" dimension from the front to the rear of the firebox. These boards will be placed on the top side of the rear baffle just to the rear of the middle secondary tube, you will push the baffle boards towards the rear of the firebox until they fall in place at the rear side of the middle secondary tube. You will place one board to the far left side of the firebox and one board to far right side of the firebox. Confirm that both boards are laying flat on the rear baffle and that they are not overlapping each other.
3. Next, you will install the baffle blanket. It will be installed with the 15-1/2" dimension from the front to rear of the firebox. Install by lifting it into place between the front and rear baffle. Place the blanket over the rear baffle and rear baffle boards that you have just installed. Next you will place the baffle blanket that is protruding beyond the front side rear baffle on the top side of the front baffle.
4. The final step of the baffle board & baffle blanket installation will be installing the front baffle boards. The front baffle boards will be the two remaining baffle boards which are the larger two baffle boards of the four baffle board kit. They will be installed with the 9-5/8" dimension from the front to rear of the firebox. Start by setting the back side of the board on the rear baffle making sure that it is placed far enough back to lift up and onto the front baffle. Next you will place the front edge of the front baffle boards on the top side of the front baffle and slide them towards the firebox front until it stops against the front baffle edge. You will do this with each front baffle board with one to the right side of the firebox and one to the left side of the firebox. Confirm that the baffle blanket is directly on top of the baffle boards and that it does not protrude beyond the front baffle or front baffle boards as shown in ***Figure 4***.

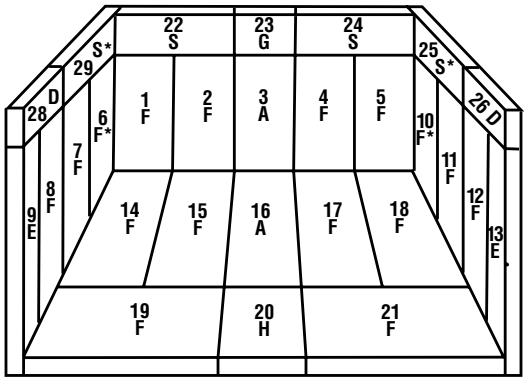

Front View
See the following for brick sizes

***Fits against the back of the firebox.**

NOTE: These bricks may be slightly smaller to adjust for steel and firebrick tolerances beyond our control. Be sure to measure and mark bricks with their numbers when removing.

Figure 2 - Firebrick Diagram

WARNING: IF THE BRICKS ARE NOT INSTALLED EXACTLY AS SHOWN THEY COULD FALL OUT OF PLACE DURING REFUELING OR BURNING OF THE INSERT CAUSING SERIOUS INJURY.

Brick Sizes

(see Figures on this page)

A = 4-1/4" x 9"
D = 2-1/8" x 6-1/4"
E - 1-3/4" x 9"
F = 4-1/2" x 9"
G = 2-1/8" x 4-1/4"
H = 4-1/4" x 4-1/2"
S = 2-1/8" x 9"

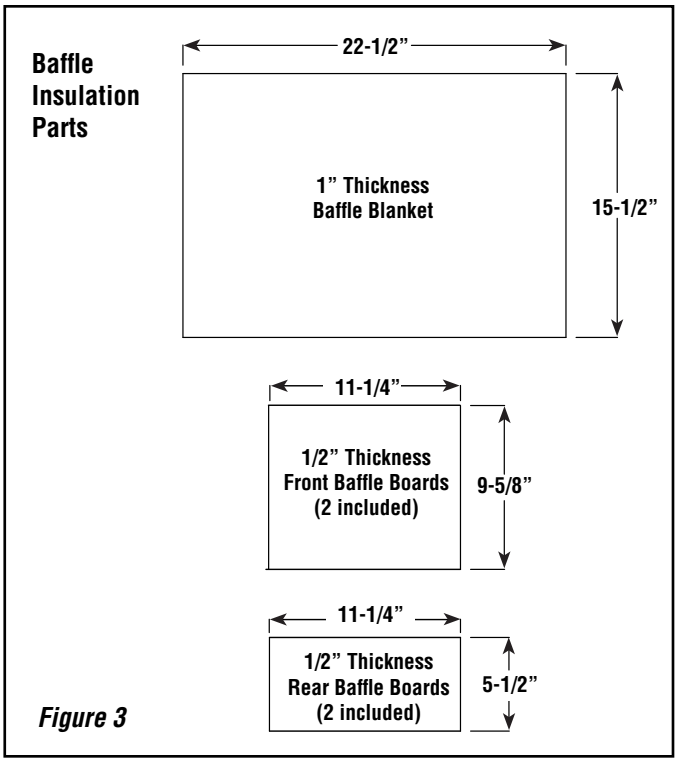

Figure 3

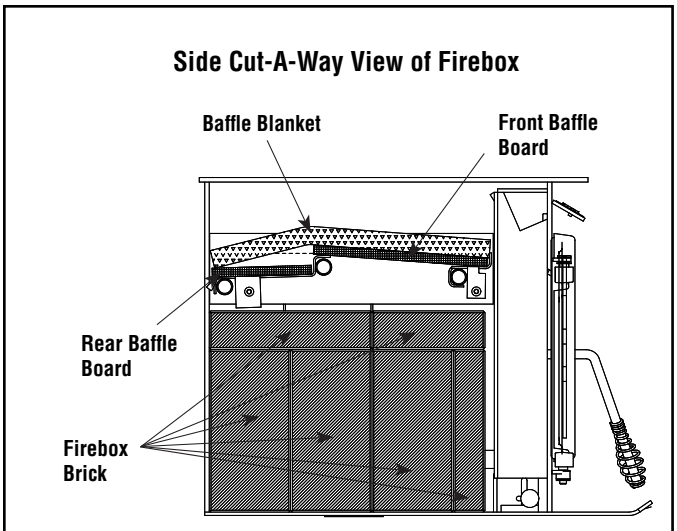

Figure 4

NOTE: DIAGRAMS & ILLUSTRATIONS ARE NOT TO SCALE.

REQUIRED CLEARANCES

WARNING: BE ABSOLUTELY SURE THE DISTANCE BETWEEN THE HEATER AND THE SURFACE OF ANY COMBUSTIBLE CONSTRUCTION IS NOT LESS THAN SHOWN ON THIS PAGE.

Model	*A	*B	*C	*D	E(1)
C260	30" 762mm	20" 508mm	20" 508mm	15" 381mm	8" 200mm
C260 with mantel and/or side shields	17" 432mm	14-1/2" 368mm	20" 508mm	8" 200mm	8" 200mm

Model	F (1)	G	H	J	M
C260	22" 559mm	14" 356mm	22-1/2" 572mm	5-1/4" 133mm	50-1/2" 1283mm
C260 with mantel and/or side shields	22" 559mm	14" 356mm	22-1/2" 572mm	5-1/4" 133mm	38" 965mm

* Reduced clearances may be available for A, B, C and D dimensions per NFPA 211 - latest edition, Standard for Chimneys, Fireplaces, Vents and Solid Fuel-Burning Appliances (in Canada CSA B365 - latest edition). See section on "Reduction of Appliance Clearance with Specified Forms of Protection."

** Side view of optional mantel deflector shown.

(1)Hearth extension reductions: 2" (51 mm) reduction for 2" (51 mm) raised hearth. (USA) 16" minimum hearth extension on all stoves and inserts as measured from the door opening of the unit. (Canada) 18"(450 mm) minimum hearth extension on all stoves and inserts as measured from the door opening of the unit. Minimum distance of floor protection to the side = 8" (200 mm). This is measured from the sides of the door opening in the USA and from the sides of the insert in Canada.

This appliance may be installed in a bedroom in the United States.

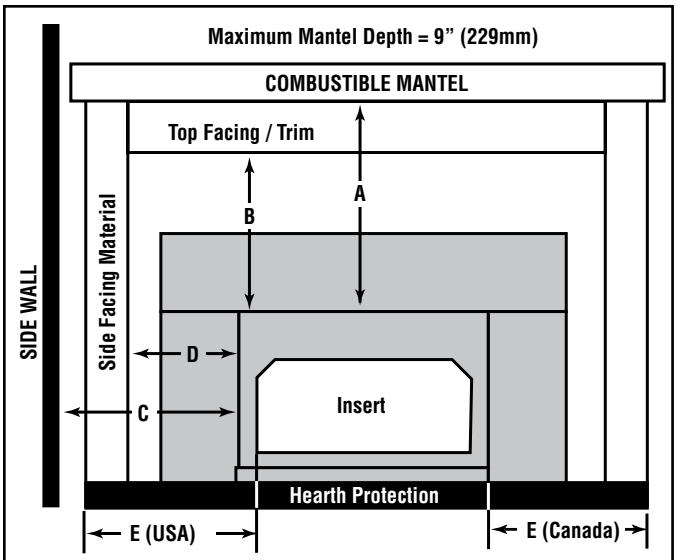

Figure 5

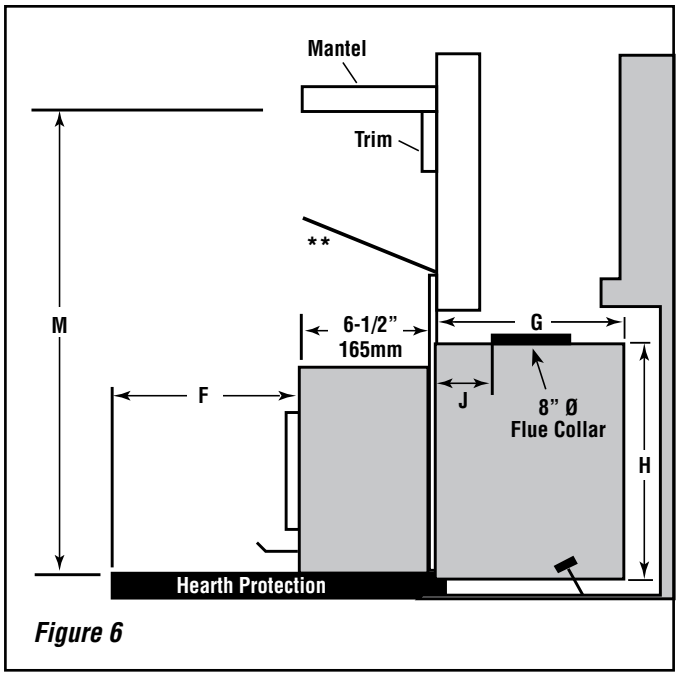

Figure 6

NOTE: Facing material that projects more than 3/4" (19mm) from the wall is considered a mantel or side wall.

C260	Masonry Fireplace UBC Chapter 37
Depth Min.	14-3/4" (375mm)
Height Min. ❶	22-3/4" (578mm)
Width Min.	30-1/2" (775mm)
Lintel Max. Depth ❶	5-1/4" (133mm)
❶ *Without use of adjustable offset box or smoke deflector*	

Table 1 - Fireplace Sizing

NOTE: DIAGRAMS & ILLUSTRATIONS ARE NOT TO SCALE.

HEARTH PROTECTION

The hearth and/or floor protection must be a thermally rated non-combustible hearth/floor protector meeting or exceeding a thermal rating of k=.84 or equivalent with a listed thickness of listed thickness of 3/4" (19 mm) minimum in the USA and Canada. The covering must extend USA-16"/Canada-18" (C260) in front of the heater and 8" to the side (measured from door opening in the USA and measured from the side of the unit in Canada).

Using Alternate Material As Floor / Hearth Protection

The hearth extension or alternate material used as a floor/hearth protector must be constructed of a durable noncombustible material having an equal or better thermal conductivity value (lower k value) of k =.84 BTU/IN FT2 HR °F or a thermal resistance that equals or exceeds r = 1.19 HR °F FT2 IN/BTU with a minimum thickness of 3/4". With these values, determine the minimum thickness of the alternate material required using the formula(s) and shown in ***Table 2***.

NOTE: *Any noncombustible material having a minimum thickness of 3/4"(19 mm) whose k value is less than .84 or whose r value is more than 1.19 is acceptable. If the alternate material used has a higher k value or lower r value will require a greater thickness of the material used. In some cases, if the k value is less or the r value higher, a thinner material may be used.*

Methods of determining floor protection equivalents:
To determine the thickness required for the alternate material when either the **"k"** value or **"r"** value is known, use either the **k formula** or **r formula**.

Example: If Micore 160 Mineral Fiber Board is to be used for the floor protection, how thick must this material be?

k_M = k value per inch of ***alternate*** material
r_M = r value per inch of ***alternate*** material
T_M = minimum thickness required for ***alternate*** material
T_s = standard thickness of the ***alternate*** material

k_L = k value per inch of ***listed*** material
r_L = r value per inch of ***listed*** material
T_L = minimum thickness of ***listed*** material

NOTE: An asterisk "*****" indicates, it is a value taken from ***Table 2***.

Using the k formula:

Minimum thickness of alternate material (T_M) = k-value (per Inch) of alternate material (k_M) / k-value (per inch) of listed material (k_L) x Specified min. thickness of listed material (T_L)

$$T_M = \frac{k_M}{*.84} \times T_L$$

$$T_M = \frac{*.35}{*.84} \times .75"$$

.312 (inches) = .417 x .75"

Answer - The minimum required thickness of the Micore 160 is .312" therefore round up to nearest standard thickness available which is 3/8" (.375")

Using the r formula:

Minimum thickness of alternate material = r-value (per Inch) of listed material / r-value (per inch) of alternate material x Specified min. thickness of listed material

$$T_M = \frac{r_L}{r_M} \times T_L$$

$$T_M = \frac{*1.19}{*2.86} \times .75"$$

.312 (inches) = .416 x .75"

Answer - The minimum required thickness of the Micore 160 is .312" therefore round up to nearest standard thickness available which is 3/8" (.375")

Listed Material			
	k (per inch)	r (per inch)	Listed Min. Thickness
Listed Material	.84 K_L	1.19 r_L	3/4" (.75") T_L
** Approved Alternate Materials for Floor/Hearth Protection			
Alternative Materials	Thermal Values		Minimum Thickness (rounded to nearest 1/8 inch)
	k (per inch) K_M	r (per inch) r_M	Min. Thickness T_M
Kaowool M Board	.47	2.13	.42" (1/2")
Micore 160™ *U.S. Gypsum*	.35	2.86	.31" (3/8")
Micore 300™ *U.S. Gypsum*	.46	2.17	.41" (1/2")
Durock™ Cement Board *U.S. Gypsum*	1.92	.52	1.71" (1-3/4")
Hardibacker™	1.95	.51	1.74" (1-3/4")
Hardibacker 500™	2.30	.43	2.05" (2-1/8")
Cultured Stone Hearthstone™	2.82	.35	2.52" (2-5/8")
Wonderboard	3.23	.31	2.88" (3")
Super Firetemp M *Johns-Manville*	.61	1.64	.54" (5/8")
Super Firetemp L *Johns-Manville*	.54	1.85	.48" (1/2")
Face brick	9.00	.111	8.04" (8-1/8")
Common brick	5.00	.20	4.46" (4-1/2")
Cement mortar	5.00	.20	4.46" (4-1/2")
Ceramic tile	12.5	.08	11.16" (11-1/4")
Marble	~11	~.09	9.82" (9-7/8")

Table 2 - USA AND CANADA REQUIREMENTS

***** If the hearth extension material(s) that is intended to be used is NOT listed on Table 2, the material can still be used if the material(s) is noncombustible. However, the manufacturer of the material must provide either the listed k-value per inch or r-value per inch with listed thickness so that the minimum thickness required for the hearth can be calculated (per instructions here or as specified in the NFI Certification Manuals).***

CHIMNEY REQUIREMENTS

This appliance is approved for use in a masonry fireplace built to UBC Chapter 37 or equivalent with a minimum 30-1/2" (775mm) opening width at the front of the fireplace.

This appliance may be installed using 6" chimney in vertical installations utilizing a 8" to 6" reducer (cat. # 71134) at the flue collar. If the venting system is all vertical and the total vent length above the flue outlet exceeds 14 feet, it is recommended that the 8" to 6" pipe reducer is used and a 6" venting system be installed.

Do not remove brick or mortar from masonry fireplace to accommodate insert. Approved with or without positive flue connection. Approved with minimum 6" (152 mm) diameter stainless steel listed reline system. Country® Collection inserts are tested to UL 1482 / ULC S628 and listed by OMNI-Test Laboratories, Inc.; Portland, OR.

IMPORTANT NOTE: See *Draft Requirements* and *Selecting a Proper Venting System* on ***Page 4*** to assist you in choosing the proper venting system for your installation.

Remove and clean behind unit frequently, as creosote build-up may occur rapidly.

WARNING: Chimney connector must be in good condition and kept clean. Do not install damaged parts.

INSTALLATION PROCEDURES - MASONRY CHIMNEY

NOTES:

- *Although not required, a full-length stainless steel liner is recommended for optimum safety and performance. See your IHP dealer for details.*
- *When installing your fireplace insert with a positive flue connection (see **Page 10**), be sure to leave the insulation off the surround panels (flanges) and leave a 1/4" (6 mm) airspace insulation off the surround panels and the facing of your fireplace.*
- *This appliance may be vented into a code-approved masonry chimney with flue liner.*

1. **READ ENTIRE INSTALLATION INSTRUCTIONS**.
2. Check all **REQUIRED CLEARANCES** as specified in the previous section *(**Page 7**)* of this installation and operation manual.
3. Wear gloves during installation in case of sharp edges on the fireplace insert and it's parts.
4. Open or remove the existing fireplace damper. Make sure the damper cannot fall closed.
5. Install the two 1/2" x 3" (13 mm x 76 mm) leveling bolts -heads up- a few turns in the leveling nuts on each side of the outer chamber of the insert at the lower rear corners.
6. Position the insert in the center of the fireplace opening and push it back until the surround brackets are approximately 2" (51 mm) away from the fireplace front.
7. Install the side surround panels and push the insert up snug against the fireplace face. Then with the location selected remove the surround panels and level the fireplace insert with the leveling bolts using a 3/4" (19 mm) socket, extensions (to reach the bolt head) and a ratchet.
8. Glue the insulation around the outer edge of both the top and side surround panels.
9. Install the surround panels loosely, align and tighten. Check for a tight fit against the fireplace.
10. Locate the draft rod extension (5/16" [8 mm] round by 11-3/4" [299 mm] long) and a coupling nut (5/16"/8 mm x 7/8"/22 mm).
11. Slide the extension draft rod through the bracket attached to the bottom of the left side hearth plate, making sure the end without the grooves is toward the fireplace insert body. Thread the coupling nut on the end closest to the fireplace insert body and then thread the coupling nut on the rod from the fireplace insert.
12. Slide the fireplace insert tight to the fireplace face. Level the insert with the leveling bolts using a 3/4" socket, extensions (to reach in to the bolt head) and a ratchet.
13. To install the decorative brass trim on the top surround panel, connect the 3 pieces at the mitered corners using the corner brackets supplied. Slide the assembled trim down onto the top surround panel. The surround should fit snugly in the groove towards the back of the trim.
14. Install the top surround panel on the fireplace insert with the three screws supplied. Tighten snugly.
15. Install the blower and blower extensions per the instructions provided in the blower kit.
16. Install the brick and baffle as per instructions on ***Page 6***.

POSITIVE FLUE CONNECTION

A positive flue connection is providing a seal between the vent pipe or liner and the existing fireplace chimney for the purpose of preventing room air passage to the chimney cavity of the fireplace. There are different approved methods to achieve this. See *Direct Connect Positive Flue Connection* on this page.

When creating a positive flue connection, a positive flue connector ring kit is required (sold separately - see *Figure 7)*. The connector ring kits (listed below) provide a means to directly attach rigid pipe or an flex pipe adaptor to the flue outlet.

71162 - 8" Positive Flue Connector Ring Kit
71163 - 8" to 6" Reducer w/ Positive Flue Connector

Install connector ring kits per instructions provided in kits

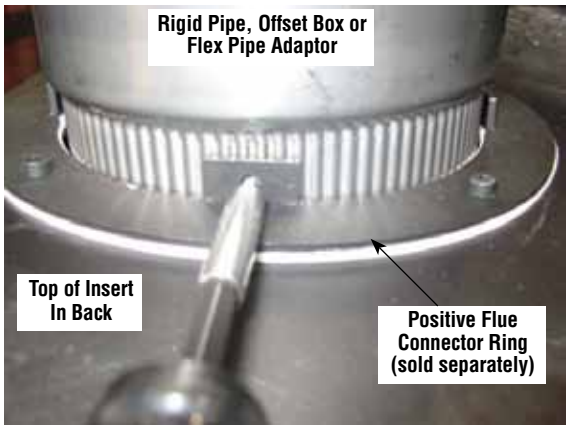

Figure 7 - Connector Ring Kit

Direct Connect Positive Flue Connection

Required in Canada

See the following instructions for approved methods of achieving a positive flue connection - See *Figure 8*.

A qualified installer should evaluate the existing fireplace to determine the best method for achieving a positive flue connection between the vent pipe or liner and the existing fireplace chimney. The most common method for achieving a positive flue connection in masonry fireplaces is to secure a seal-off plate (i.e. 22-gage sheet steel) in the fireplace throat using masonry screws. Other acceptable methods include packing noncombustible material (i.e. high temp fiberglass or ceramic insulation) around the vent pipe or using a flue adapter. Whatever "seal off" method is used, it must effectively seal the area to prevent room air passage to the chimney cavity of the fireplace.

Offset Boxes

Offsets can be handled using an offset box (it aligns flue outlet of insert with the fireplace flue (see ***Figure 9***). Care should be used to ensure that this adjustable offset box is oriented so it does not angle down when positioned on the insert flue outlet (level or slightly up at the outbound end is recommended).

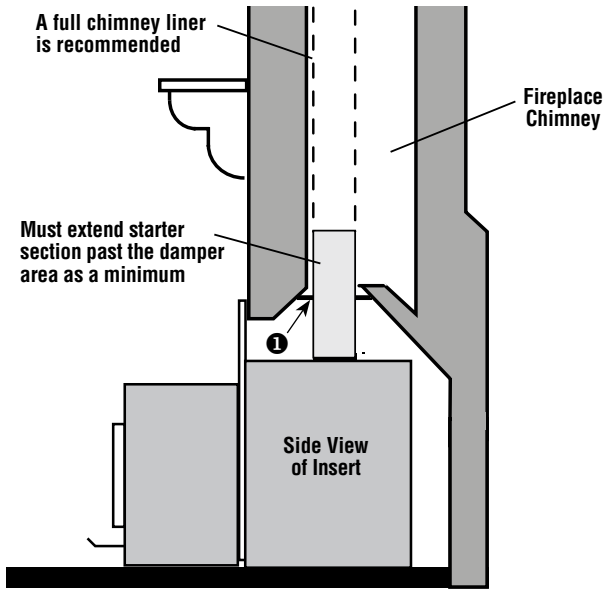

❶A non-combustible seal is required at the damper area (to prevent dilution air from entering the chimney). See *Direct Connect Positive Flue Connection* on this page. A seal-off plate method is shown here.

Figure 8 - Positive Flue Connection

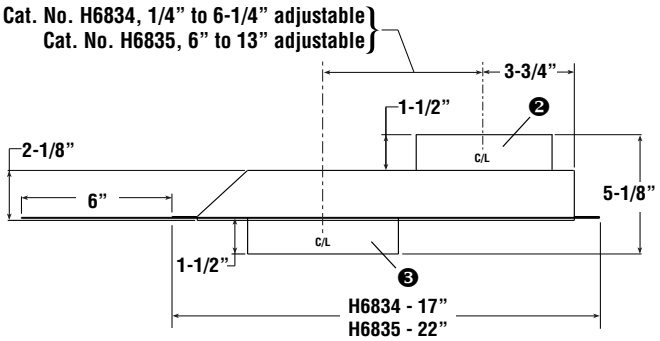

SIDE VIEW

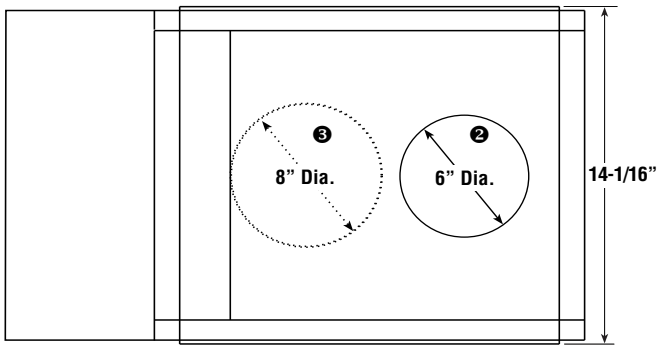

TOP VIEW

❷Top 6" collar attaches to rigid pipe or flex liner.
❸Bottom 8" collar attaches to connector ring on insert flue outlet.

Figure 9 - Offset Box Dimensions

NOTE: DIAGRAMS & ILLUSTRATIONS ARE NOT TO SCALE.

CLEARANCE TO COMBUSTIBLES

See "Required Clearances" on ***Page 7***.

FIREPLACE PRE-INSTALLATION PREPARATION

NOTE: IHP RECOMMENDS PROFESSIONAL INSTALLATION BY A LICENSED AND BONDED INSTALLER. SEE YOUR DEALER FOR RECOMMENDATIONS. IMPROPER INSTALLATION OR MIS-USE WILL VOID YOUR WARRANTY AND CREATE A SERIOUS SAFETY HAZARD.

Remove any doors or screen materials from the fireplace opening. Remove the damper mechanism completely. Also remove grates or ember catches inside the fireplace hearth. If your fireplace is equipped with a smoke shelf or baffle and if it interferes with the installation it may be removed. Side and rear refractory may also be removed, if necessary, to facilitate installation. No modifications shall be done unless allowed on the previous list. Retain all removed parts, they must be reinstalled before the fireplace can be used in it's original condition.

INSERT PRE-INSTALLATION PREPARATION

Install the two 3" (76 mm) long bolts (with the head up) through the nuts attached to the insert on the lower rear corner of each side. This will allow you to level the insert when placed into the fireplace.

Measure from the front of the top surround mount to the center of the flue. Determine if there is an alignment problem in connecting a liner from the chimney to the insert's flue. If there is an alignment problem, connection can be made using a short piece of stainless flex or a stainless steel offset box (available from your dealer). Before installing the liner, make any attachment brackets or drill any holes in the liner, offset box, or insert. Once installed, it may be difficult or impossible to drill additional holes.

CHIMNEY LINER INSTALLATION

Remove the existing chimney cap and install a stainless steel liner into the chimney (if a special section has been used or drilled to attach to the insert, it must be the bottom piece). The next piece should be a dripless slip joint; followed by the rest of the chimney liner. Fasten the chimney at the top when it is positioned so that the slip joint will allow the lowest piece to slide up enough to clear the insert during installation. Insulate the top four to six feet between the liner and the chimney to prevent heat loss. Install the cap and flash if necessary to prevent water or creosote from entering the chimney's venting system.

From inside the fireplace firebox, attach any adapters or flue offsets and slide the liner up as far as necessary for the bottom piece to clear the insert during installation.

In Canada, This fireplace insert must be installed with a continuous chimney liner of 6" or 8" diameter extending from the fireplace insert to the top of the chimney. The chimney liner must conform to the Class 3 requirements of CAN/ULC-S635, Standard for Lining Systems for Existing Masonry or Factory-Built Chimneys and Vents, or CAN/ULC S640, Standard for Lining Systems for New Masonry Chimneys.

INSTALLING THE INSERT

Place the insert into the fireplace, making sure to center it side to side. Slide the insert in until the surround mounts are approximately 1/2" (13 mm) from the face of the fireplace where the surround panels cover.

Lower the chimney and make attachment to the insert. Level the fireplace insert by using a 3/4" socket and a long extension and adjusting the bolts on either side of the insert.

Install the side surround panels with the screws supplied. Push the insert in until there is approximately a 1/4" (6 mm) gap between the back of the surround panels and the face of the fireplace. Before installing the top surround panel, make sure all connections are tight and that no part of the insert or chimney is touching the firebox or chimney in the fireplace. There must be a minimum of 1" (25mm) clearance between the fireplace insert and the zero clearance fireplace. Install the top surround panel.

If additional support is necessary, factory punched holes in the front corners of the bottom air chamber will accept leveling legs. Carefully measure the distance from the hearth protection to the bottom of the fireplace insert. Use 3/8" diameter bolts that are 1/2" (13 mm) longer than the distance just measured. Thread a nut onto the bolt approximately 1" (25mm). Lift the fireplace insert slightly and insert a bolt into each hole and then thread the nut up the bolt until the front is securely supported. Install another nut onto the bolt through the air space in the fireplace insert and tighten securely. If desired an insert front support, Cat. No. H5296, is available to fill the space between the insert and the hearth protection.

Install the brick and baffle as per ***Page 6***.

POST INSTALLATION CHECKS

1. Check that all chimney pipe joints are securely fastened.
2. Be sure all roof flashings are watertight (if applicable).

FOR YOUR OWN PROTECTION AND INSURANCE PURPOSES, HAVE YOUR CHIMNEY AND CONNECTOR PIPE INSTALLATION INSPECTED BY YOUR LOCAL BUILDING CODE AUTHORITY OR FIRE MARSHAL BEFORE STARTING A FIRE IN YOUR STOVE OR INSERT. NOTIFY YOUR INSURANCE COMPANY.

FIREPLACE WARNING TAG

The factory built firebox must accept the insert without modification other than removing bolted or screwed together pieces such as baffles / smoke shelf / deflectors, ash lips, glass door, screen or door tracks, log grates, refractory or masonry lining and damper assemblies. Any fireplace component, which is removed, must be retained so they can be reinstalled to restore the fireplace to its original operating condition. The removal of any part must not alter the integrity of the outer shell of the pre-engineered fireplace cabinet in any way. Any parts removed must be replaceable. If any components are removed from (or altered) from the existing fireplace, a metal Warning tag (shown below) must be affixed inside the fireplace firebox, so that it shall be visible upon removal of the fireplace insert. NOTE: Secure the tag using screws or nails to the fireplace.

WARNING

THIS FIREPLACE HAS BEEN ALTERED TO ACCOMMODATE A FIREPLACE INSERT AND SHOULD BE INSPECTED BY A QUALIFIED PERSON PRIOR TO RE-USE AS A CONVENTIONAL FIREPLACE.

OPERATING HINTS

1. Burn only dry, well-seasoned wood for maximum heat output. In some states it is illegal to burn wet wood or anything other than clean, dry wood products.
2. Your stove or fireplace insert is designed to operate with the door closed! Operate only with the door shut tightly at all times except when loading wood and possibly on start up to establish a draft. Never leave the unit unattended while the front door is slightly opened.
3. **DO NOT** hit or move the baffle boards while loading wood. Occasionally check the baffle. Make sure the baffle blanket is always flush with the front of the baffle boards. Loading oversized logs may dislodge the baffle boards.
4. **CAUTION: THE DRAFT CONTROL MUST BE FULLY OPEN BEFORE OPENING THE DOOR TO AVOID POSSIBLE COMBUSTION FLASH!!** (Ignition of hot volatile gases as the door is opened).
5. Feeding excessive amounts of fuel to the stove or fireplace insert should be avoided. It is important to supply it with sufficient draft and fuel to maintain a moderately hot fire. If, during overnight burns, heavy creosote deposits develop inside your stove or fireplace insert and on the door, the draft is set too low - review your burning habits!

⚠ WARNING

Be careful not to abuse door assembly by striking or slamming it. If the door assembly or glass is broken or damaged, they must be replaced with factory original parts before heater can be safely operated. Use only components provided by the manufacturer as replacement parts.

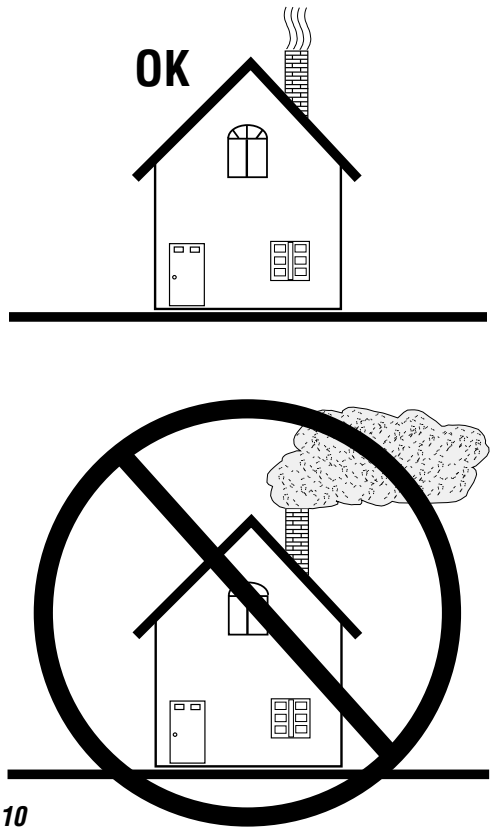

Figure 10

STARTING AND MAINTAINING A FIRE

Be sure to clean plated accessories with a household type glass cleaner and a very soft cloth to remove any fingerprints and residues prior to the first fire.

1. **NEVER USE FLAMMABLE LIQUIDS TO START OR REKINDLE A SOLID FUEL FIRE!!**
2. Fully open the primary draft control by pulling the 1" plastic knob out on the left side (lower front corner) until it stops (away from the fireplace insert). This control determines the amount of air entering the fireplace insert. Pushing it towards the fireplace insert reduces the burn rate in the firebox. For your convenience, the rod on this control is marked with four grooves to assist you in obtaining repeatable burn rates.
3. Place a small amount of crumpled paper in front of the firebox and cover it with a few pieces of kindling.
4. Light the paper and allow sufficient time for the kindling to become fully engulfed in flames. You will now close the wood units front door. (Your wood units front door may or may not need to be left slightly open during this start up process, this depends on the appliance model and the amount of draft present. Do not leave the unit unattended while the front door is slightly open) Once kindling is burning well, larger pieces of wood may be added, then the door should be fully closed if there was the need to keep it slightly open during start up.

   DO NOT LEAVE THE APPLIANCE UNATTENDED WHILE THE FRONT DOOR IS SLIGHTLY OPEN.

   CAUTION: Do Not alter the adjustment range of the draft control for increased firing for any reason.

   Operate only with fuel door and ash drawer closed. Maintain all seals in good condition. Do not operate with broken glass.

   Do Not build the fire too close to the glass.

   Do not operate the appliance with the door open or ajar other than possibly during start up to create a draft (Do not leave the unit unattended while the front door is slightly open during start up). Operating the appliance with the door open other then in initial start up if needed will produce extreme temperatures within the appliance. Damage caused from over-firing is not covered under the manufacturers limited warranty.
5. **When operating any wood burning appliance, it is important to become familiar with how the damper control affects heat output and the overall temperature of the appliance. A stove thermometer can be a helpful tool to help ensure you are not over-firing your appliance and it will also ensure you are burning fuel at a rate that is most efficient. Place a stove thermometer on the top of the appliance. Monitor the temperature every 15 minutes or so until you become more familiar with your appliance. Close the damper all the way down if you begin to reach 600 degrees, as this is a sign that you are operating your appliance at too high a temperature.**
6. For best results, use smaller pieces of wood to get the stove or fireplace insert temperature very high before loading larger wood for sustained burns. If necessary, crack the door to allow ignition of the fuel charge. **Do not leave the unit unattended while the front door is slightly open**. Now you can add larger pieces of wood and after several minutes of high burn, set the left control for the desired heat output. Check the exhaust in about 15 to 20 minutes. Large amounts of smoke indicate an improper burn setting (either too high or too low). Adjust and recheck in 5 to 10 minutes.

NOTE: DIAGRAMS & ILLUSTRATIONS ARE NOT TO SCALE.

BLOWER OPERATION

Blower Operation

The blower can be operated manually or automatically (blower will turn on when the stove or insert is hot and turn off when the stove or insert is cool).

The rocker switch on the control panel allows you to select between manual operation or automatic operation as follows (see ***Figure 10***):

MANUAL OPERATION: Turn rocker switch to the manual position (up) and adjust rheostat knob to the desired speed. The blower will have to be manually turned "OFF" by rotating the rheostat knob counterclockwise until it clicks.

AUTO OPERATION: Turn rocker switch to the "AUTO" position and the rheostat to the ON position (rotate rheostat knob clockwise until it clicks). When the stove or insert warms up, the blower will automatically turn on (adjust rheostat knob to the desired speed setting). When the stove or insert cools down, the blower will automatically turn off.

Rheostat Operation - The highest blower speed is obtained by turning the rheostat knob clockwise until it clicks "ON", then rotate towards "HIGH" to increase blower speed. Rotate the knob clockwise for a lower speed. To turn off, continue to rotate the knob counterclockwise until it clicks "OFF."

Blower Operation Guidelines

While in auto operation mode, the blower will turn off and on based on the temperature of the appliance. Auto operation ensures there is sufficient heat build-up to warm the air being moved by the blower before the blower is turned on. Likewise, when the appliance cools off, the blower is turned off to prevent circulating cool air. Depending on the size and intensity of the fire it may be necessary to adjust the blower speed accordingly to ensure uninterrupted blower operation. For example a small fire may require a slower blower speed to keep the heat output by the blower consistent. If the blower is operated in manual mode, it may be necessary to adjust the blower speed as the fire begins to burn down and the appliance is no longer hot enough to effectively heat the air moved by the blower. If the air coming from the blower feels cool, one should either decrease the blower speed or stoke the fire to build up more heat.

NOTE: Turn blower off before opening the door to load the fuel.

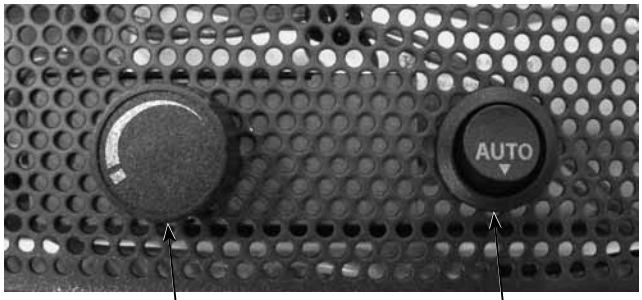

Blower Speed Control Knob (rheostat)

Manual / Auto Rocker Switch

Figure 11 - Blower Controls

⚠ WARNING

The blower must be plugged directly into a properly grounded three-prong receptacle, 120 VAC, 60 Hz, single phase. Do not cut or remove the grounding prong from this plug. Do not route power cord under or in front of appliance.

Installation must be in accordance with National Electrical Code, ANSI/NFPA 70 - latest edition. In Canada, the current CSA C22.1 Canadian Electrical Code - latest edition.

DANGER: Disconnect power before servicing blower.

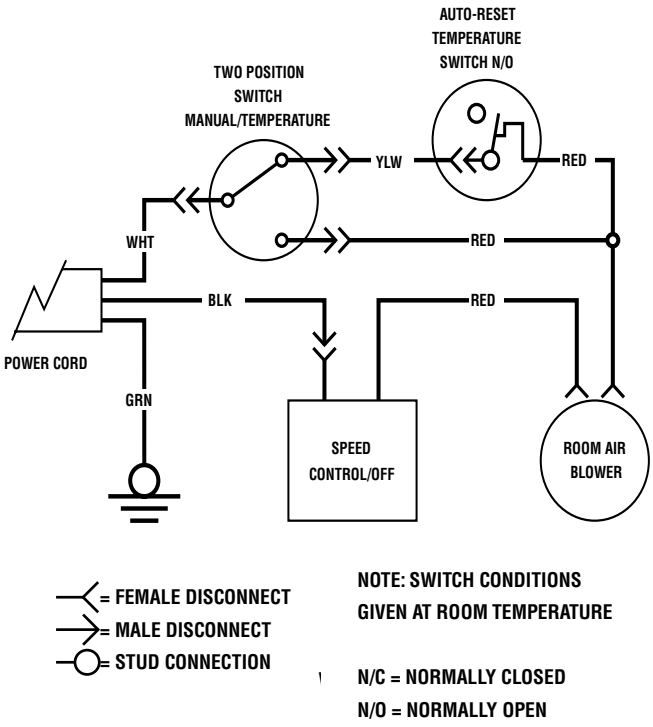

Figure 12 - Blower Wiring Schematic

NOTE: DIAGRAMS & ILLUSTRATIONS ARE NOT TO SCALE.

OPERATING TECHNIQUES AND HINTS

Recent developments in wood-burning technology have made wood-burning a cleaner and more convenient way to heat your home. Overall efficiency in a wood-burning appliance is a combination of combustion efficiency and heat transfer efficiency. Whether heating your entire home or just a room or two, your understanding of how to best operate your stove or insert will enhance its overall efficiency and performance. What this can mean to you is longer, cleaner burns, less wood use and more heat.

GETTING THE MOST OUT OF YOUR FIREPLACE INSERT

The following sections will outline techniques you can use to "get the most out of your fireplace insert." Please read them carefully.

MAXIMIZING YOUR FIREPLACE INSERT'S OVERALL EFFICIENCY

It is important to know that for high, combustion efficient, clean burns, you will need to have sufficient temperatures inside the firebox for thorough combustion. The best method for determining if you have sufficient temperatures is to watch the brick lining in your firebox. When you first light your stove or fireplace insert, the firebrick will turn a dark brown or black. After 20 to 30 minutes of a hot fire, most of the bricks should return to near their original light brown or yellow color. This means the firebrick have reached a high enough temperature for your fireplace insert to achieve high combustion efficiency.

Second and just as important, is achieving a high level of heat transfer efficiency. Slowing the rate of flow through the stove or insert enhances heat transfer, thus allowing more time for heat to be transferred into your home. To do this, be sure to thoroughly preheat your fireplace insert and then reduce the amount of primary air by closing the draft control (lower left) to about 1/2 to 3/4 open. This will decrease the excess oxygen in your flue, which carries heat up your chimney, but should still be enough air to allow the fireplace insert to produce its maximum heat output. (More air may produce a lightly greater amount of heat, but will greatly increase wood consumption). When the area being heated reaches a comfortable temperature, slow the burn rate by closing the control to further improve heat transfer.

To get the most out of your fireplace insert, you will need to combine good combustion efficiency with good heat transfer practices. The following are some tips on how to operate your fireplace insert to achieve the highest overall efficiency.

1. Thoroughly preheat your fireplace insert before slowing the burn rate by closing the draft control.
2. Measure the fireplace insert temperature at the hottest point on the insert top or face. Use this information to repeat burn rates.
3. Once preheated, add wood (if needed) and partially close the draft control (lower left).
4. Operate your stove or fireplace insert as much as possible in the low to medium burn ranges.
5. Do not lower the draft setting so low as to completely extinguish the flames in the firebox. Check for at least some small flames 20 minutes after setting the draft control.
6. Do not continually operate your stove or fireplace insert in the high (wide open) setting. This wastes wood by carrying a great deal of heat up the chimney and can damage your stove or fireplace insert and chimney.
7. Go outside and check your chimney. More than a very small amount of smoke indicates wasted heat, creosote build up and pollution.

ACHIEVING CLEAN, LONG BURNS

To achieve long burn times, after having thoroughly preheated the stove or fireplace insert, let the insert top cool down to 275 degrees to 400 degrees. Now load the firebox and set the draft control. At this point, you may need to burn the fireplace insert with the draft open for a few minutes to ignite the wood. All Country® Collection stoves and fireplace inserts are EPA tested for emissions at low burn with the air control completely closed. Whether or not you should burn your fireplace insert with the air control completely closed will depend on the following factors:

* How you load your wood
* Your chimney type, height and draft
* Your wood type and its moisture content
* The temperature of the stove or fireplace insert or fireplace insert
* Which model stove or insert you have

Experiment with different loading configurations to achieve longer burns. Try loading the wood from side to side and nesting it in the ashes to prevent airflow under and around the wood. Fresh wood should be loaded to the back of the firebox or to the sides. Hot coals or half burned wood should be brought towards the front of the firebox. The way you load your wood can seriously affect burn times. If the new load does not ignite within a few minutes, try crisscrossing the load to allow more airflow around the fire or try a slightly hotter insert temperature.

Determining the lowest setting for efficient low burns. This will require some experimentation on your part. Try closing the air control all the way with the fireplace insert temperature at 325 degrees to 350 degrees. If the flames are completely extinguished, open the air control half way and then slowly close it until there is only a small amount of flame. It is important to check the fireplace insert about 20 minutes after setting the draft control as it takes this long for the fireplace insert temperature to stabilize. There should still be some small flames on or above the wood load.

Use 325 degrees as a starting point. You can try starting temperatures 25 degrees higher or lower to achieve desired burn times, start 25 degrees lower if the fireplace insert burns the wood too quickly or 25 degrees higher if there are no flames in the firebox for more than a few minutes after loading the wood. You may or may not need to burn the fireplace insert with the air control open for a few minutes prior to setting the draft for a low burn, this will depend on the factors mentioned above. **Be sure not to smolder a fire overnight. Check your chimney for large amounts of smoke as this indicates very poor combustion.**

It is important to realize that stove technology has changed. Stoves and fireplace inserts have changed a great deal in the last few years. This has led to substantial changes in the methods of operation in new stoves as compared to older stoves. In old stoves without full brick linings and ceramic insulation, the rule was "get the stove as hot as possible before setting the draft on low for overnight burns." On newer, high technology Country® Collection stoves, this is not necessary. Although it is still important to have the fireplace insert hot enough to burn efficiently, it will require less preheating. Once you have determined your optimum operating temperatures for various burn rates, we believe you will find your fireplace insert an extremely convenient way to achieve your heating needs.

Do not reload the fireplace insert for long burns when the stainless secondary tubes or baffles are glowing red, or when the fireplace insert is uncomfortably hot to load. This indicates the fireplace insert is too hot to load for a long burn. Also, do not load wood for a long burn on a deep bed of hot coals. Try stirring the coals a few minutes before loading the fireplace insert for a low burn to allow some of the unburned coals time to burn.

MAINTENANCE

DOOR HINGES: If door hinges need lubricating, use an anti-seize compound (never use oil) available from your IHP dealer.

DOOR LATCH: If your door latch fails to latch tightly and the gasket is in good condition, place a length of pipe

(cheater bar) over the inside portion of the door handle and bend slightly toward the door until the proper adjustment is obtained. If the door handle does not close easily, apply high temperature anti-seize to the striker.

DOOR GASKET: Periodically check gasket to make sure it is not overcompressed. If compressed, replace with a special woven door rope (Don't try substituting rope, only use special IHP door rope).

PLATED ACCESSORIES: Clean only with a household type glass cleaner and a very soft cotton cloth. Other products may damage plated finish, paint and gaskets.

BAFFLE BLANKET: Your baffle blanket should be inspected during every chimney cleaning. If the blanket is compressed or heavily stained, it should be replaced. Heavy creosote stains or matting is an indication of improper use and your burning habits should be reviewed.

GLASS CLEANING: Only clean glass with products specifically made to use on wood stoves. Other products could damage gaskets and paint. Never scrape glass with a razor blade. This can pit the glass and make it impossible to clean in the future.

WINDOW GASKET: The window gasket can be checked by running the flame of the match near the gasket and around the door. If the flame is drawn in around the window, the gasket should be replaced.

DOOR HANDLE: Door handle may become tight as you use the fireplace insert. Free the handle up by using dry graphite supplied with the fireplace insert. The directions are included with the graphite.

⚠ WARNING

Inspect and clean chimney and connector frequently. Under certain conditions of use, creosote buildup may occur rapidly. See *Installing the Insert* on *Page 11* for instructions on removing the appliance for cleaning (reverse order of instructions).

GLASS CLEANING GUIDELINES

WARNING: DO NOT CLEAN GLASS WHEN APPLIANCE IS HOT!

Glass on any wood stove or fireplace insert will not stay perfectly clean. Here are some guidelines for cleaning and caring for the glass:

- Ensure the stove or fireplace insert is cold prior to cleaning glass.
- This appliance is designed to provide a flow of air over the inside of the glass, where along with high heat helps inhibit build-up on the glass. When build-up occurs, a commercial glass cleaner designed for stoves is recommended. Regular household glass cleaners will not clean creosote.
- Do not use abrasives such as steel pads, steel wool or oven cleaner as they will scratch the glass. Never scrape glass with a razor blade as this may pit the glass and make it impossible to clean in the future.
- Do not use chemical glass cleaners as they may damage the gaskets or painted surfaces.

TIPS FOR KEEPING THE GLASS CLEAN

- Burn only dry seasoned cord wood. **Wet wood = Dirty glass.**
- A short, hot fire (15 - 20 minutes) may help to clean off some of the normal buildup. **Lower burns = more build-up. Higher burns = less build-up.**
- Keep freshly loaded wood away from the glass.
- After reloading, allow all the wood to catch flame before dampering down the stove or fireplace insert.

⚠ CAUTION

Cleaning Glass: Ensure appliance is cold prior to cleaning glass. A commercial glass cleaner designed for stoves is recommended. Do not use abrasive cleaners. Do not clean with any materials, which may scratch or otherwise damage the glass. Scratches on the glass can develop into cracks or break. Inspect the glass regularly. If you detect a crack, extinguish the fire and contact your dealer for a replacement.

GLASS REPLACEMENT INSTRUCTIONS

Step 1. **Remove Door Assembly** - Open door to remove E clip from the upper hinge pin. Remove upper hinge pin by pulling up while holding the opposite side of the door. Lift door out of the lower hinge pin and place face down on a soft surface.

Step 2. **Remove Door Back Screws (6 ea.)** - Using a 5/32" allen wrench remove the 6 retainer screws from the faceplate. To locate screws, peel back the door gasket as necessary.

Step 3. **Disassemble Door Assembly** - Flip door assembly over to be face up. Separate faceplate from door back by pulling up on faceplate.

Step 4. **Remove Glass** - Carefully remove broken glass one piece at a time (protective gloves are recommended)

Step 5. **Install New Glass Assembly** - Install the new glass with gasket in recess on door back (use only factory supplied 5mm ceramic glass. Do not substitute).

Step 6. **Reinstall Faceplate and Screws** - Reinstall faceplate onto door back and while holding the door assembly together flip the assembly back onto it's face. Carefully reinstall the screws. Be very careful not to overtighten the screws (this could result in glass breakage when the stove or fireplace insert is hot) and it is highly recommended to use anti seize on the screws.

Step 7. **Reinstall Door** - Set door assembly back into the lower hinge mount while holding the handle side of the door up. Place the upper hinge pin back in the mount and door assembly. Reinstall the E clip that was removed.

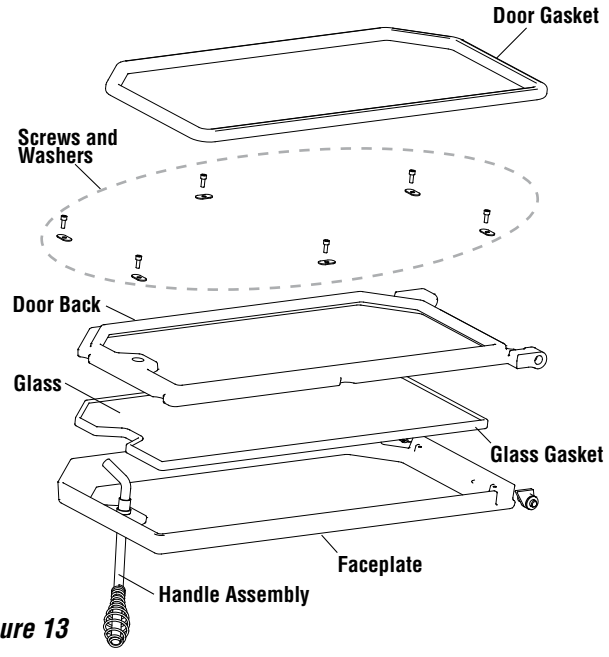

Figure 13

NOTE: DIAGRAMS & ILLUSTRATIONS ARE NOT TO SCALE.

TROUBLESHOOTING

Problem	Solution
POOR DRAFT:	Extend chimney in length or have the chimney realigned to the proper size flue. Oversized chimneys normally have poor drafts. Remember, the stove or fireplace inserts' draft depends solely on the natural draft of the chimney (See Draft Requirements o***n Page 4***). If your stove or fireplace insert is not drafting properly, your chimney is the problem. All stoves and inserts are thoroughly tested to ensure proper draft with the correct size chimney flue.
EXCESSIVE DRAFT:	With better chimneys being more common, excessive draft can be an issue. Alleviate excessive draft by slowing the burn rate of the stove or fireplace insert once it has reached proper operating temperature (See Maximizing Your Fireplace inserts Overall Efficiency on ***Page 14***).
DIRTY GLASS:	1) Burn smaller, hotter fires and check to make sure you are not setting the draft down too far with the draft control. 2) Make sure your wood is well seasoned and dry (not open to rain - see Creosote and Fuel sections on ***Page 5***). 3) See Poor Draft section (above) and Clean Glass (above).
SMOKES WHEN DOOR IS OPEN:	1) If smoke is entering the room, check to make sure your baffle boards are properly installed and that the baffle blanket is pushed back flush with the front of the baffle boards. 2) Check the chimney for blockage due to creosote (see Creosote section on ***Page 5***). 3) Check draft, (See POOR DRAFT section above).
WOOD BURNS TOO FAST:	1) The draft control must be closed further. 2) Add fuel at lower firebox temperatures. 3) Load wood side to side and reduce the flow of air under wood. 4) The door seal may need replacing, check for leakage. 5) See "Excessive Draft."
POOR HEAT OUTPUT:	1) Check your wood. Wet, moist, unseasoned wood will not produce heat. 2) Your stove or fireplace insert needs to be seasoned (moisture removed from the steel and brick). Continue to burn a fire. It normally takes from one to three weeks of burning to season your stove or fireplace insert (See Burn-In Period on ***Page 5***). 3) See Excessive Draft section above.
PAINT GIVES OFF ODOR (smoke):	Paint is tempering-in. Burn only moderately hot for the first few days until paint is fully cured. Then burn a very hot fire to cure any paint that may not easily cure. Open windows or door to ventilate (See Burn-In Period on ***Page 5***).

DO'S AND DON'T

DO NOT: Install or operate the stove or fireplace insert before reading this manual.

DO NOT: Close the draft beyond the point at which the flames are completely extinguished.

DO NOT: Open the stove or fireplace insert door without **fully opening** the draft first.

DO NOT: Burn driftwood or wood that has been in salt water. This includes some mill ends and scrap lumber that has been floated in salt water on the way to the mill. (This will void your warranty).

DO NOT: Handle the plated faceplate unnecessarily. Use the door handle only.

DO NOT: Force oversized logs into the firebox as this may dislodge the baffle assembly.

DO NOT: Close the door tightly during Burn-In period.

DO: Be sure to clean any fingerprints from optional accessories that have plated surfaces before burning the appliance. Clean the plated surfaces only with household type glass cleaner and a very soft cloth.

DO: Consult local building department if other than recommended clearances are desired.

DO: Read instructions for the baffle boards and baffle blanket occasionally to ensure you have not bumped or moved them out of place when loading wood.

DO: Check the chimney and baffle monthly to make sure they are clean.

DO: Burn seasoned, dry wood only! (RAIN = WET WOOD)

DO: Open the door frequently during Burn-In period to keep gasket from adhering to the curing paint.

DO: Enjoy the warm feeling of your new Country® Collection stove or insert.

REPLACEMENT PARTS - MODEL C260

Contact an IHP dealer to obtain any of these parts. Never use substitute materials. Use of non-approved parts can result in poor performance and safety hazards.

C260 FRONT DOOR PARTS LIST		
1	H5639	Door Rope Kit, 7/8" Dia. (6' 2")
2	H5629	Upper Hinge Pin
3	H5625	Upper Hinge Pin E-Clip
4	H5630	Lower Hinge Pin
5	H5646	Lower Hinge Pin Copper Washer
6	H5640	Glass Gasket Kit (8' 4")
7	H5577	Set of 6 screws and 6 washers for door assembly
8	H5654	Spring Handle / Nickel
	H5653	Spring Handle / Gold
9	71099	Traditional Door Glass / Plain
	71100	Traditional Door Glass / Sailboat
	71095	Traditional Door Glass / Cattail
	71097	Traditional Door Glass / Evergreen
	71098	Traditional Door Glass / Floral
10	71082	Traditional Door Faceplate / Black
	71083	Traditional Door Faceplate / Gold
	71084	Traditional Door Faceplate / Nickel
	71149	Traditional Door Faceplate / Brushed Gold
	71146	Traditional Door Faceplate / Brushed Nickel
11	H5562	Traditional Door Back w/ Handle (door gasket included)
USB BLOWER PARTS (C260)		
15	H8067	UHPI Wiring Harness
16	H5655	UHPI & UHPII Blower Speed Control
17	H8068	Snap Switch Bracket w/ hardware
18	H8082	Replacement Power Cord
19	H8069	UHPI Blower Cage-Snap Switch/ Black
	H8070	UHPI Blower Cage-Snap Switch/ Gold
	H8076	UHPI Blower Cage-Snap Switch/ Nickel
	H8077	UHPI Blower Cage-Snap Switch/ Brushed Gold
	H8078	UHPI Blower Cage-Snap Switch/Brushed Nickel
29	H8064	Snap Switch w/ Gasket & Hardware
32	H8066	Control Switch (Manual, Off, Automatic)

C260 INSERT PARTS		
33	71139	Large Flange Screw/ Black - Seven Needed
	H5294	Large Flange Screw/ Gold - Seven Needed
	H5295	Large Flange Screw/ Nickel - Seven Needed
34	F1871	IronStrike™ Nameplate Kit w/ Hardware - Nickel
	F1872	IronStrike Nameplate Kit w/ Hardware - Gold
35	H5650	Draft Rod Knob
36	H5645	Side Leveling Bolts - Two Included
37	H5644	Blower Mounting Bolts - Two Needed
39	H5612	Firebrick 4-1/2" x 9" (16 per stove)
40	H5576	Firebrick 4-1/4" x 9" (2 per stove)
41	H3097	Firebrick 4-1/4" x 4-1/2" (1 per stove)
42	H5611	Firebrick 2-1/8" x 9" (4 per stove)
43	H5595	Firebrick 2-1/8" x 6-1/4" (2 per stove)
44	H3094	Firebrick 2-1/8" x 4-1/4" (1 per stove)
45	H5613	Firebrick 1-3/4" x 9" (2 per stove)
46	H5568	Front Baffle/Secondary Burn Tube Assembly
47	H5567	Middle/Rear Baffle/Secondary Burn Tube Assembly
48	H5569	Complete Baffle/Secondary Burn Tube Assembly (includes tubes and all mounting hardware)
49	H8021	Baffle Blanket 22-1/2" x 15-1/2" x 1"
50	H8020	Baffle Board Kit w/ Baffle Blanket
C260 MISCELLANEOUS PARTS		
	71052	Dry Graphite (Apply to door handle and door hinges)
	H5633	Anti Seize 2 gram pouch

REPLACEMENT PARTS - MODEL C260

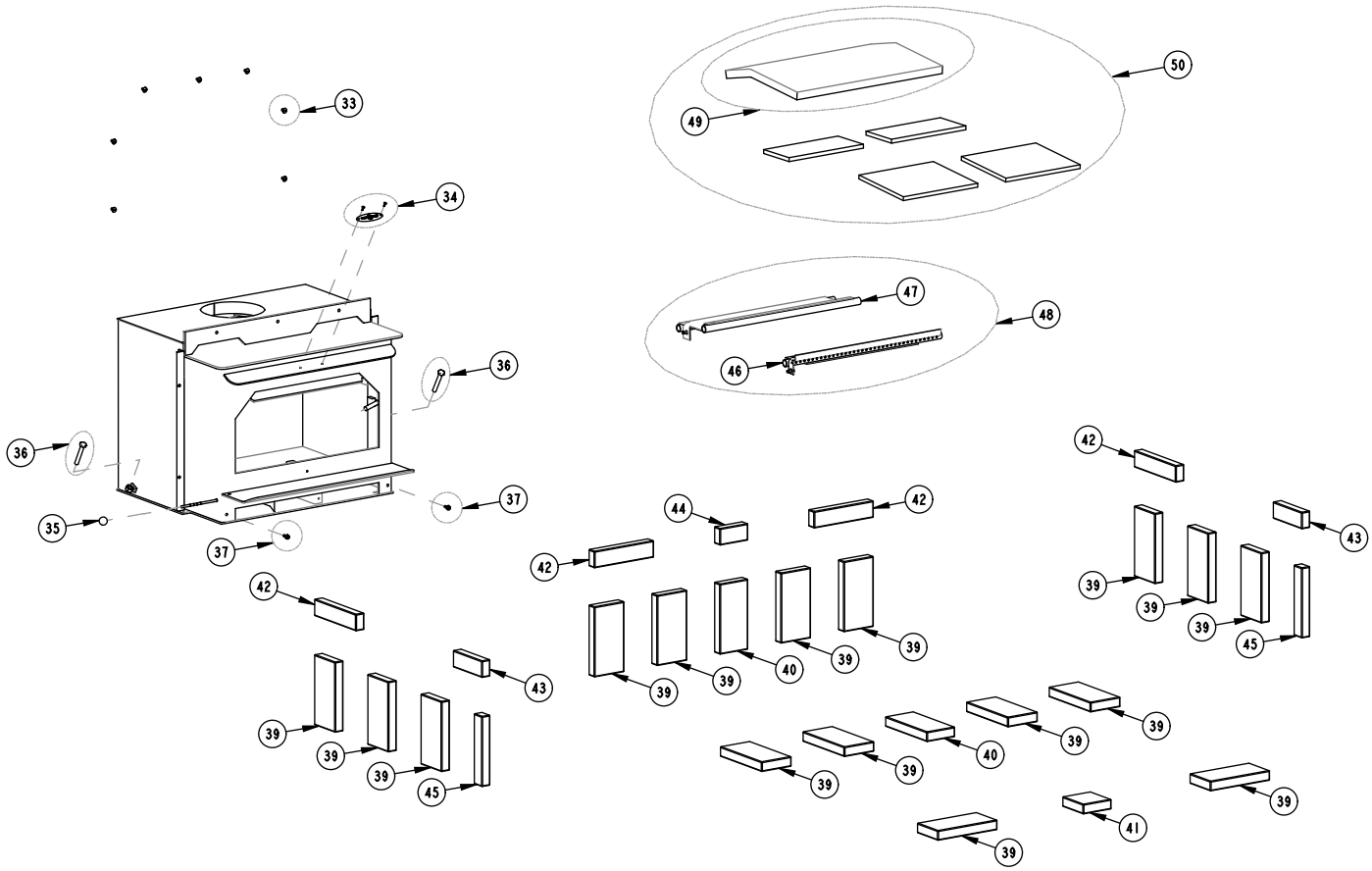

REPLACEMENT PARTS - MODEL C260

Door Parts

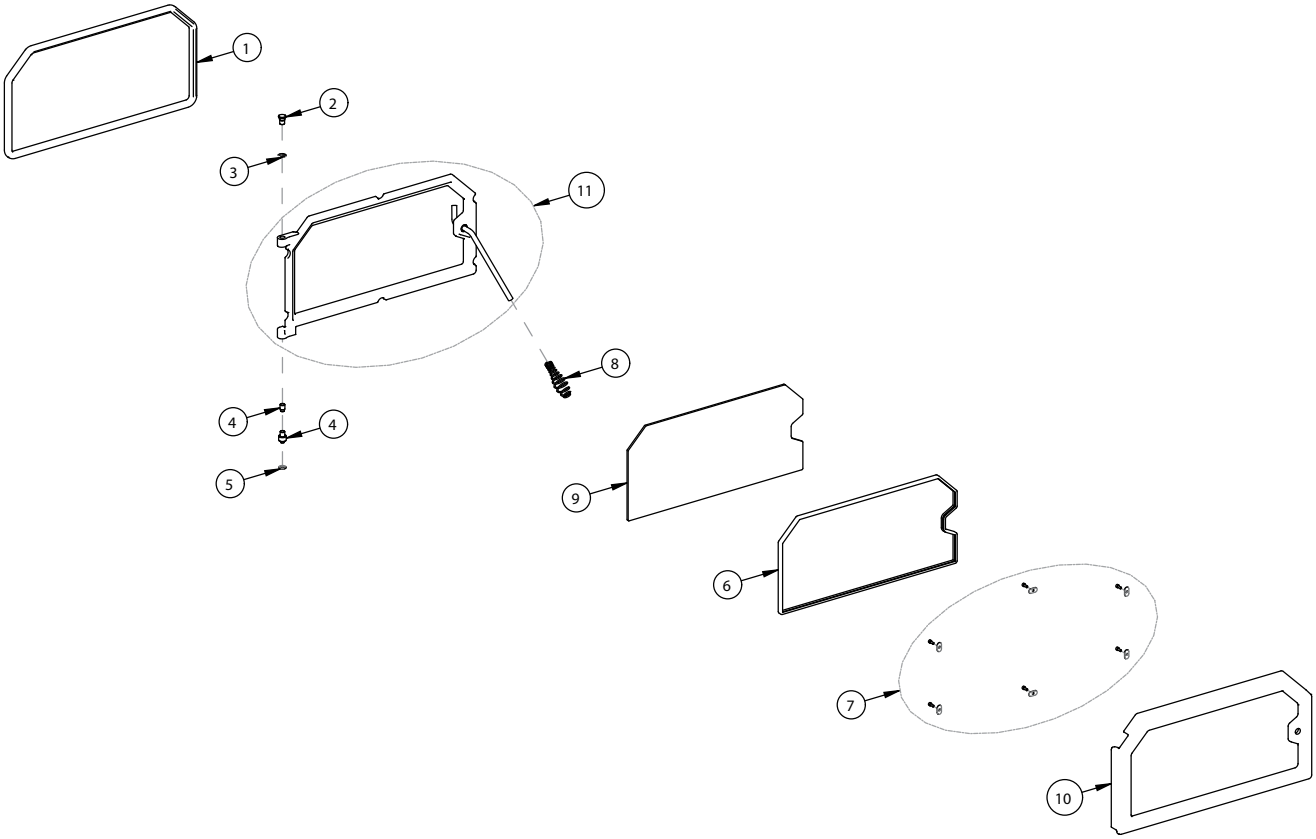

Blower Parts

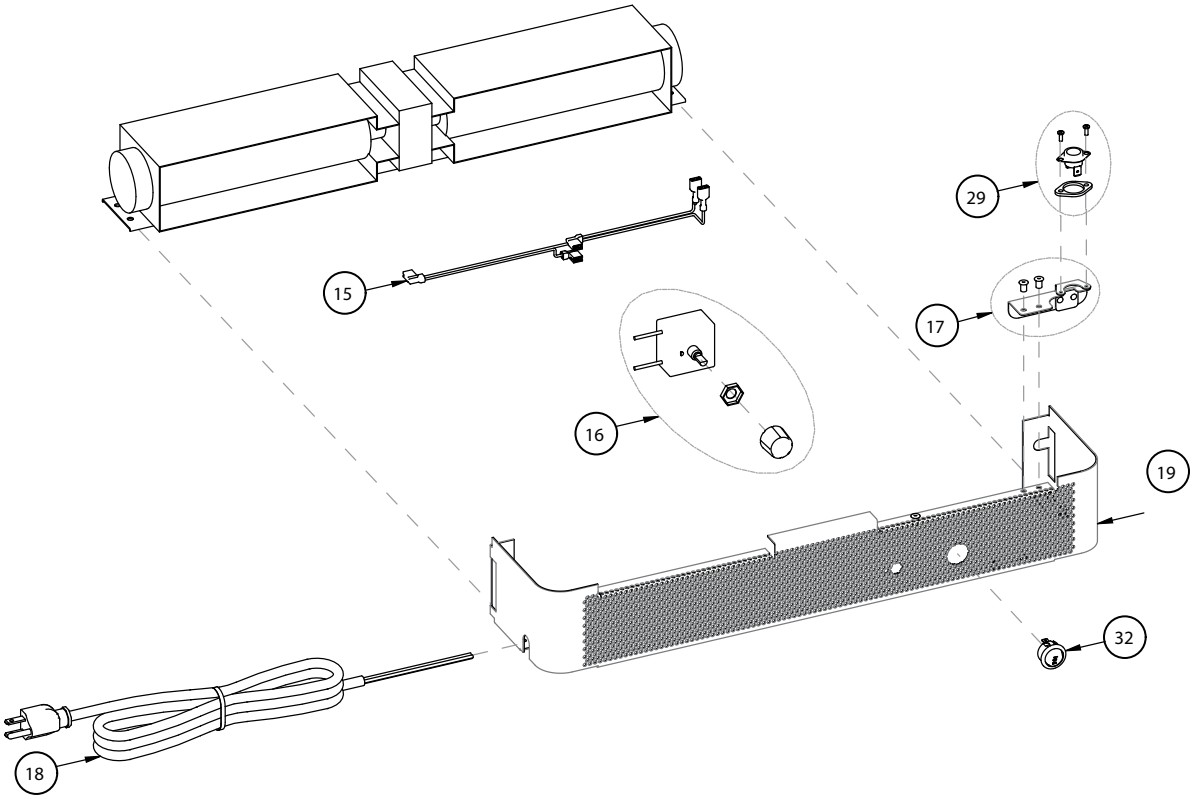

NOTE: DIAGRAMS & ILLUSTRATIONS ARE NOT TO SCALE.

ACCESSORIES - MODEL C260

Product Reference Information			
Cat. No.	Description	Ship. Weight	Ship. Volume
H7893	C260T-B, Insert / Traditional Black Door/ Nickel Nameplate	479 lb.	17.40 cu. ft.

SURROUND PANELS / TOP AND SIDES (REQUIRED)		
Cat. No.	Model	Description
		29" x 40":
71038	WFPT0740-L	Top Surround 7-1/2" x 40"
71031	WFPS0621	Side Surrounds 6" x 21-5/8"
		29" x 48":
71039	WFPT0748-L	Top Surround 7-1/2" x 48"
71032	WFPS1021	Side Surrounds 10" x 21-5/8"
		33" x 40":
71040	WFPT1140-L	Top Surround 11-1/2" x 40"
71031	WFPS0621	Side Surrounds 6" x 21-5/8"
		33" x 48":
71041	WFPT1148-L	Top Surround 11-1/2" x 48"
71032	WFPS1021	Side Surrounds 10" x 21-5/8"
FACEPLATE KITS (INCLUDES FACEPLATE, HANDLE AND NAMEPLATE)		
71082	TRAD-FP-B-LG	Traditional, Black
71083	TRAD-FP-G-LG	Traditional, Gold
71084	TRAD-FP-N-LG	Traditional, Nickle
71149	TRAD-FP-BG-LG	Traditional, Brushed Gold
71146	TRAD-FP-BN-LG	Traditional, Brushed Nickel
SURROUND TRIM - THESE ARE NOT REQUIRED, BUT AN OPTION		
71023	WFT2940-B	Black 29" x 40"
71024	WFT2948-B	Black 29" x 48"
71027	WFT3340-B	Black 33" x 40"
71028	WFT3348-B	Black 33" x 48"
71009	WFT2940-G	Gold 29" x 40"
71010	WFT2948-G	Gold 29" x 48"
71013	WFT3340-G	Gold 33" x 40"
71014	WFT3348-G	Gold 33" x 48"
71076	WFT2940-N	Nickel 29" x 40"
71077	WFT2948-N	Nickel 29" x 48"
71080	WFT3340-N	Nickel 33" x 40"
71081	WFT3348-N	Nickel 33" x 48"

BLOWERS		
Cat. No.	Model	Description
H7912	WLINS-BLWR-B-SS	Blower Insert Black
H7913	WLINS-BLWR-G-SS	Blower Insert Gold
H7914	WLINS-BLWR-N-SS	Blower Insert Nickle
H7915	WLINS-BLWR-BN-SS	Blower Insert Br-nkl
H7916	WLINS-BLWR-BG-SS	Blower Insert Br-gold
MISC.		
71053	Paint Gold (1/2 Pint)	Paint Gold (1/2 pint)
71054	Paint Nickel (1/2 Pint)	Paint Nickel (1/2 pint)
H8159	TSPK-B	Touch-Up Paint , Metallic Black, 12 oz. Aerosol
H5296	FRNT-SPPT	Front Support 40"- 48" Width / 8"-0" Height *(ref. form #775305M)*
71134	REDUCER 8-6"	Pipe Reducer from 8" to 6" Stainless
71162	WINS-8FC	8" Connector Ring Kit
71163	WINS-8/6REDCR	8" - 6" Connector Ring Kit w/Reducer
H6834	OFFADJFLUEBX8SM	Adjustable Offset Flue Box 8" flue / 6" exhaust, 0" - 6"
H6835	OFFADJFLUEBX8LG	Adjustable Offset Flue Box 8" flue / 6" exhaust, 6" - 12"

CONTACT YOUR LOCAL BUILDING OR FIRE OFFICIALS ABOUT RESTRICTIONS AND INSTALLATION INSPECTION IN YOUR AREA
COMMUNIQUEZ AVEC LES AUTORITÉS LOCALES EN BÂTIMENT OU LE SERVICE DE PRÉVENTION DES INCENDIES POUR CONNAÎTRE LES NORMES D'INSTALLATION ET D'INSPECTION DE VOTRE RÉGION

Listed Masonry Fireplace Accessory/Insert / Poêle encastrable certifié pour installation dans un foyer de maçonnerie

IRONSTRIKE HEAT FOR LIFE™

Manufactured By / Fabriqué Par:
Innovative Hearth Products, LLC
1508 Elm Hill Pike, Suite 108
Nashville, TN 37210

Tested & Listed By OMNI-Test Laboratories, Inc. Portland Oregon USA

"PREVENT HOUSE FIRES"

Install and use only in accordance with manufacturer's installation instructions and your local building codes. Do not connect this unit to a chimney flue serving another appliance.

Optional Blower, Part No.s: H7912 (black), H7913 (gold), H7914 (nickel), H7916 (brushed gold), H7915 (brushed nickel)

Blower Electrical Rating: 120V, 60 Hz, 1 Amp
Trans Flow, QLN 652424-3045L
Do not route power cord under or in front of appliance.

Report No./Numéro de Rapport: 050-S-02b-2
(Test Date Dec. 21, 1995 / Testé le 21 Décembre 1995)

Serial No.
Numéro de série

CE260

Model / Modèle: C260 ■
E260 ■

Tested to/Testé à: UL 1482, ULC S628-93
Type Of Fuel: Solid Wood Only

Minimum Clearance to Combustible Materials - Inches (millimeters)

INSERT CLEARANCE DIAGRAM

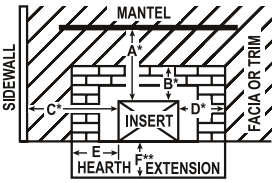

(A) Clearance from Insert top to Mantel = 30" (762mm). Maximum mantel depth = 9"
(B) Clearance from insert top to combustible = 20" (508mm)
(C) Minimum clearance to combustible sidewall = 20" (508mm)
(D) Minimum clearance to combustible side trim = 15" (381mm)
(E) Minimum distance of floor protection to the side = 8" (200mm). This is measured from the sides of the door opening in the USA and from the sides of the insert in Canada.
(F) Minimum distance from front of insert to combustible = 22"/559mm (C260 & E260).

The hearth and/or floor protection must be a thermally rated non-combustible hearth/floor protector meeting or exceeding a thermal rating of k=.84 or equivalent with a listed thickness of listed thickness of 3/4" (19mm) minimum in the USA and Canada. Install only in a masonry fireplace, built to UBC Chapter 37. Do not remove brick or mortar from masonry fireplace to accommodate insert. Use flue outlet with or without a direct connector. Approved with minimum 6" (152mm) diameter stainless steel listed reline system. Remove and clean behind unit frequently, as creosote build up may occur rapidly.

* Reduced clearances may be available for A, B, C, and D dimensions by using optional mantel and/or side shields. Consult with your Lennox Hearth Products dealer for the dimensions of the shields.
** Hearth extension reductions: 2" (51mm) reduction for 2" (51mm) raised hearth. 16" (406mm) minimum hearth extension on all inserts as measured from the door opening of the unit.

CAUTION: HOT WHILE IN OPERATION. DO NOT TOUCH. KEEP CHILDREN, CLOTHING, FURNISHINGS AND COMBUSTIBLE MATERIAL A CONSIDERABLE DISTANCE AWAY. CONTACT MAY CAUSE SKIN BURNS. SEE NAMEPLATE AND INSTRUCTIONS. DO NOT OVERFIRE. IF HEATER OR CHIMNEY CONNECTOR GLOWS, YOU ARE OVERFIRING. INSPECT AND CLEAN CHIMNEY AND CONNECTOR FREQUENTLY. UNDER CERTAIN CONDITIONS OF USE, CREOSOTE BUILDUP MAY OCCUR RAPIDLY. DO NOT USE GRATE OR ELEVATE FIRE - BUILD WOOD FIRE DIRECTLY ON HEARTH. FEED DOOR MUST BE CLOSED DURING FIRING EXCEPT WHEN ADDING FUEL. KEEP ASH DOOR CLOSED TO AVOID EXCESS HEAT. DANGER: RISK OF ELECTRICAL SHOCK. DISCONNECT POWER BEFORE SERVICING UNIT. TYPE OF FUEL: SOLID WOOD ONLY.

Date of Manufacture / Date De Fabrication

2013	2014	2015	JAN. JANV	FEB. FEVR	MAR. MARS	APR AVR	MAY MAI	JUN JUIN	JUL JUIL	AUG AOÛT	SEP SEPT	OCT OCT	NOV NOV	DEC DEC
			■	■	■	■	■	■	■	■	■	■	■	■

U.S. ENVIRONMENTAL PROTECTION AGENCY
Certified to comply with July 1990 particulate emission standards.

Part No./ No. pièce #36212 Rev. B, 1/2010 DO NOT REMOVE THIS LABEL Made in U.S.A.

"PREVENTION DES INCENDIES"

Installer et utiliser l'appareil en conformité avec les directives d'installation du fabricant et des autorités locales en bâtiment ou le service de prévention des incendies. Ne pas brancher cette unité à un conduit de fumée raccordé à un autre appareil.

Type de combustible: Bois seulement

Ventilateur Optionnel, No. De Pièces : H7912 (noir), H7913 (plaqué or), H7914 (plaqué nickel), H7916 (plaqué or, fini brossé), H7915 (plaqué nickel, fini brossé)
Spécification Électrique Du Ventilateur : 120V, 60 Hz, 1 Amp
Trans Flow, QLN 652424-3045L
Ne pas faire passer le fil électrique sous ou en avant de l'appareil

Dégagements Minimums Aux Matériaux Combustibles - En Pouces (millimètres)

DÉGAGEMENT REQUIS POUR L'ENCASTRABLE

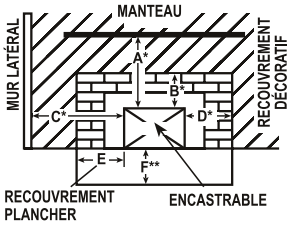

(A) Espace entre l'encastrable et le manteau de cheminée = 30" (762mm). Profondeur maximum de la tablette du manteau de cheminée 9"
(B) Espace entre l'encastrable et les matériaux combustibles du haut = 20" (508mm)
(C) Espace minimum entre l'encastrable et le mur de côté combustible = 20" (508mm)
(D) Espace minimum entre l'encastrable et les matériaux combustibles du côté = 15" (381mm)
(E) Minimum requis de matériel non combustible au plancher, de chaque côté de l'ouverture de l'appareil = 8" (200mm)
(F) Minimum requis de matériel non combustible à l'avant de l'appareil = 22"/559mm (C260 / E260)

Le panneau protecteur de plancher doit être un matériel non combustible, dont l'épaisseur minimale 3/4" - 19mm et dont le facteur k est de 0.84 ou l'équivalent. Installer seulement dans un foyer de maçonnerie construit selon UBC Chapitre 37 ou dans un foyer approuvé par le fabricant (référez-vous au manuel). Ne pas enlever de ciment ou de briques pour installer l'encastrable. L'installation de la cheminée peut s'effectuer avec ou sans connecteur à la sortie de l'appareil. Approuvé pour raccordement avec un conduit de tubage certifié en acier inoxydable de 6" (152mm) de diamètre. Tirer l'appareil et nettoyer l'arrière fréquemment car le créosote peut s'y accumuler rapidement.
*Les dégagements minimums peuvent être réduits pour A, B, C, D en utilisant un manteau optionnel et / ou des protecteurs latéraux. Contacter votre détaillant Lennox pour la dimension des protecteurs requise.
**Réduction du recouvrement de plancher : 2" (51mm) de moins si l'encastrable est élevé de 2" (51mm). Respecter 16" (406mm) de recouvrement de plancher minimum à l'avant de l'encastrable.

ATTENTION: L'APPAREIL EST CHAUD LORS DE L'OPÉRATION. NE PAS Y TOUCHER. RISQUE DE BRÛLURES CUTANÉES. TENIR LES ENFANTS, LES MATÉRIAUX COMBUSTIBLES, LES VÊTEMENTS ET LES MEUBLES ELOIGNÉS DE L'APPAREIL. VOIR LA PLAQUE SIGNALÉTIQUE ET LES DIRECTIVES. NE PAS SURCHAUFFER L'APPAREIL. SI L'APPAREIL OU LE TUYAU DE CHEMINÉE ROUGIT, VOUS SURCHAUFFEZ. INSPECTER ET NETTOYER LA CHEMINÉE ET LE TUYAU CONNECTEUR FRÉQUEMMENT. SOUS CERTAINES CONDITIONS, IL SE PEUT QUE LE CRÉOSOTE S'ACCUMULE RAPIDEMENT. NE SURÉLEVER PAS LE FEU À L'AIDE D'UN CHENET. DÉPOSER LES BÛCHES DE BOIS DIRECTEMENT SUR L'ÂTRE. LA PORTE DOIT ÊTRE FERMÉE PENDANT L'USAGE SAUF POUR ALIMENTER LE FEU. GARDER LA PORTE "BY-PASS" (CENDRES) FERMÉE POUR ÉVITER DE SURCHAUFFER.

DANGER: RISQUES DE DÉCHARGE ÉLECTRIQUE. DÉCONNECTER LE FIL ÉLECTRIQUE DE LA PRISE DE CONTACT AVANT LE SERVICE. NE PAS FAIRE PASSER LE FIL ÉLECTRIQUE SOUS OU EN AVANT DE L'APPAREIL.

TYPE DE COMBUSTIBLE: BOIS SEULEMENT

NE PAS ENLEVER OU RECOUVRIR CETTE ÉTIQUETTE Fabriqué aux U.S.A.
IGN 09-2567

NOTE: DIAGRAMS & ILLUSTRATIONS ARE NOT TO SCALE.

Innovative Hearth Products
IronStrike™ Brand Wood Burning Stove and Insert
Limited Lifetime Warranty

THE WARRANTY

Innovative Hearth Products ("IHP") Limited Lifetime Warranty warrants your IronStrike™ Brand Wood Burning Stove or Insert ("Product") to be free from defects in materials and workmanship at the time of manufacture. The Product body, firebox and ceramic glass carry the Limited Lifetime Warranty. Ceramic glass carries the Limited Lifetime Warranty against thermal breakage only. After installation, if covered components manufactured by IHP are found to be defective in materials or workmanship during the Limited Lifetime Warranty period and while the Product remains at the site of the original installation, IHP will, at its option, repair or replace the covered components. If repair or replacement is not commercially practical, IHP will, at its option, refund the purchase price or wholesale price of the IHP product, whichever is applicable. IHP will also pay IHP prevailing labor rates, as determined in its sole discretion, incurred in repairing or replacing such components for up to five years. THERE ARE EXCLUSIONS AND LIMITATIONS to this Limited Lifetime Warranty as described herein.

COVERAGE COMMENCEMENT DATE

Warranty coverage begins on the date of installation. In the case of new home construction, warranty coverage begins on the date of first occupancy of the dwelling or six months after the sale of the Product by an independent IHP dealer/distributor, whichever occurs earlier. The warranty shall commence no later than 24 months following the date of product shipment from IHP, regardless of the installation or occupancy date.

EXCLUSIONS AND LIMITATIONS

This Limited Lifetime Warranty applies only if the Product is installed in the United States or Canada and only if operated and maintained in accordance with the printed instructions accompanying the Product and in compliance with all applicable installation and building codes and good trade practices.

This warranty is non-transferable and extends to the original owner only. The Product must be purchased through a listed supplier of IHP and proof of purchase must be provided. The Product body and firebox carry the Limited Lifetime Warranty from the date of installation. Vent components, trim components and paint are excluded from this Limited Lifetime Warranty. The following do not carry a Limited Lifetime Warranty but are warranted as follows:

Cast Iron Heat Exchanger – Replacement for five years from the date of installation
Cast iron parts – Replacement for one year from the date of installation
Catalyst – Carries a separate warranty. Refer to the warranty certificate provided for that part
Electrical components – Repair or replacement for one year from date of installation
Gaskets – Replacement for one year from the date of installation.
Gold & nickel plating – Replacement for two years from date of installation. Excludes tarnishing
Refractory & screens – Replacement for two years from date of installation. Excludes hairline cracks
Removable air tubes – Repair or replacement for seven years from date of installation. IHP prevailing labor rates for years one through five.
Labor coverage – Prevailing IHP labor rates apply for the warranty period of the component, unless otherwise noted

Parts not otherwise listed carry a 90 day warranty from the date of installation.

Whenever practicable, IHP will provide replacement parts, if available, for a period of 10 years from the last date of manufacture of the Product.

IHP will not be responsible for: (a) damages caused by normal wear and tear, accident, riot, fire, flood or acts of God; (b) damages caused by abuse, negligence, misuse, or unauthorized alteration or repair of the Product affecting its stability or performance. (The Product must be subject to normal use with approved fuels listed in the Operation Manual provided with the product. Fuel products with abnormal burning characteristics, including but not limited to fuel such as driftwood, coal or plywood and wood products using a binder may burn at excessive temperatures and may cause damage to the Product or may cause it to function improperly; IHP stoves, inserts and high efficiency EPA fireplaces are approved for burning dry seasoned wood only.); (c) damages caused by failing to provide proper maintenance and service in accordance with the instructions provided with the Product; (d) damages, repairs or inefficiency resulting from faulty installation or application of the Product.

Coverage of this Limited Lifetime Warranty is conditional upon the appliance being operated without the use of grates, irons or any other method to elevate the fire.

IHP is not responsible for inadequate system draft caused by air conditioning and heating systems, mechanical ventilation systems, or general construction conditions which may generate negative air pressure in the room in which the appliance is installed. Additionally IHP assumes no responsibility for smoking conditions caused by inadequate chimney height, adjoining trees or buildings, adverse wind conditions or unusual environmental factors and conditions. Certain IHP Products are listed for use with Security Chimneys International, Ltd. chimney systems only. Use of chimney components other than that specified in the Product manual will void the Product warranty.

This Limited Lifetime Warranty covers only parts and labor as provided herein. In no case shall IHP be responsible for materials, components or construction which are not manufactured or supplied by IHP or for the labor necessary to install, repair or remove such materials, components or construction. Additional utility bills incurred due to any malfunction or defect in equipment are not covered by this Limited Lifetime Warranty. All replacement or repair components will be shipped F.O.B. from the nearest stocking IHP factory.

LIMITATION ON LIABILITY

It is expressly agreed and understood that IHP's sole obligation and the purchaser's exclusive remedy under this warranty, under any other warranty, expressed or implied, or in contract, tort or otherwise, shall be limited to replacement, repair, or refund, as specified herein.

In no event shall IHP be liable for any incidental or consequential damages caused by defects in the Product, whether such damage occurs or is discovered before or after replacement or repair, and whether such damage is caused by IHP's negligence. IHP has not made and does not make any representation or warranty of fitness for a particular use or purpose, and there is no implied condition of fitness for a particular use or purpose.

IHP makes no expressed warranties except as stated in this Limited Lifetime Warranty. The duration of any implied warranty is limited to the duration of this expressed warranty.

No one is authorized to change this Limited Lifetime Warranty or to create for IHP any other obligation or liability in connection with the Product. Some states and provinces do not allow the exclusion or limitation of incidental or consequential damages, so the above limitations or exclusions may not apply to you. The provisions of this Limited Lifetime Warranty are in addition to and not a modification of or subtraction from any statutory warranties and other rights and remedies provided by law.

INVESTIGATION OF CLAIMS AGAINST WARRANTY

IHP reserves the right to investigate any and all claims against this Limited Lifetime Warranty and to decide, in its sole discretion, upon the method of settlement.

To receive the benefits and advantages described in this Limited Lifetime Warranty, the appliance must be installed and repaired by a licensed contractor approved by IHP.

Contact IHP at the address provided herein to obtain a listing of approved dealers/distributors. **IHP shall in no event be responsible for any warranty work done by a contractor that is not approved without first obtaining IHP's prior written consent.**

HOW TO REGISTER A CLAIM AGAINST WARRANTY

In order for any claim under this warranty to be valid, you must contact the IHP dealer/distributor from which you purchased the product. If you cannot locate the dealer/distributor, then you must notify IHP in writing. IHP must be notified of the claimed defect in writing within 90 days of the date of failure. Notices should be directed to the IHP Warranty Department at 1508 Elm Hill Pike, Suite 108; Nashville, TN 37210 or visit our website at WWW.IRONSTRIKE.US.COM.

Printed in U.S.A. © 2013 Innovative Hearth Products LLC
P/N 900205-00, Rev. NC 12/2013

Innovative Hearth Products
1508 Elm Hill Pike, Suite 108 • Nashville, TN 37210

WARRANTY

Your wood appliance is covered by a limited warranty (provided with the appliance). Please read the warranty to be familiar with its coverage.

Retain this manual. File it with your other documents for future reference.

REPLACEMENT PARTS

See ***Pages 18 and 19*** for a complete replacement parts list. Use only parts supplied from the manufacturer.

Normally, all parts should be ordered through your IHP distributor or dealer. Parts will be shipped at prevailing prices at time of order.

When ordering repair parts, always give the following information:

1. The model number of the appliance.
2. The Serial Number of the appliance.
3. The part number.
4. The description of the part.
5. The quantity required.
6. The installation date of the appliance.

If you encounter any problems or have any questions concerning the installation or application of this system, please contact your dealer.

Innovative Hearth Products, LLC (IHP)
1508 Elm Hill Pike, Suite 108
Nashville, TN 37210
www.IronStrike.us.com

PRODUCT REFERENCE INFORMATION

We recommend that you record the following important information about your appliance. If you did not purchase your appliance directly from an IHP dealer, then contact us at www.IronStrike.us.com to find your nearest IHP dealer who will answer your questions or address your concerns.

Model Number _____

Serial Number _____

Date Installed _____

Your Dealer's Name _____

NATIONAL FIREPLACE INSTITUTE NFI CERTIFIED www.nficertified.org

We recommend that our woodburning hearth products be installed and serviced by professionals who are certified in the U.S. by the National Fireplace Institute® (NFI) as NFI Woodburning Specialists or who are certified in Canada by Wood Energy Technical Training (WETT).

Wood Energy Technical Training www.wettinc.ca

NATIONAL FIREPLACE INSTITUTE NFI CERTIFIED www.nficertified.org

Nous recommandons que nos pôeles à bois soient installés et que l'entretien soit effectué par des professionnels certifiés, aux Etats-Unis par le National Fireplace Institute® (NFI) et au Canada, par le Wood Energy Technical Training (WETT).

Wood Energy Technical Training www.wettinc.ca

IHP reserves the right to make changes at any time, without notice, in design, materials, specifications, and prices, and also to discontinue colors, styles, and products. Consult your local distributor for fireplace code information.

INNOVATIVE HEARTH PRODUCTS™

Printed in U.S.A. © 2013 IHP LLC

P/N 900103-00 REV. NC 12/2013

P900103-00

1508 Elm Hill Pike, Suite 108 • Nashville, TN 37210